PRELIMINARY INSTRUCTION BOOK

for

MODEL SX-28

SUPER SKYRIDER RECEIVER

NAVY MODEL RCF

Contract: NXss - 19001

Contract Date: December 16, 1942

RESTRICTED

FREQUENCY RANGE—.55 to 43. MEGACYCLES

the hallicrafters co.

CHICAGO, ILL., U. S. A.

All reference to SX-28 applies to

NAVY TYPE CHL-46202 RADIO RECEIVER

INSTRUCTION BOOK

for

MODEL SX-28

SUPER SKYRIDER RECEIVER

FREQUENCY RANGE—.55 to 43. MEGACYCLES

the hallicrafters co.

CHICAGO, ILL., U. S. A.

TABLE OF CONTENTS

Subject	*Page*
TITLE PAGE	1
TABLE OF CONTENTS	2
A. Installation	4
1. Speaker	4
2. Antenna	4
3. Stand-by Socket	4
4. Phono jack	4
5. DC power socket	4
6. "S" meter zero set	5
B. Operation	5
1. Bandswitch	5
2. Bandspread	5
3. Tone control	5
4. Send-Receive switch	5
5. R.F. Gain control	5
6. Antenna trimmer	5
7. A. F. gain control	5
8. Selectivity control	6
9. Crystal Phasing control	6
10. Automatic noise limiter	6
11. "AVC-BFO" switch	6
12. Bass "IN-OUT" switch	7
13. Head phone jack	7
C. Summary of related circuits	7
1. The 2 stage preselector	7
2. The oscillator and converter	7
3. The I F amplifier	7
4. Variable selectivity	7
5. Crystal filter circuit	8
5a. Single signal adjustment	8
5b. Crystal	8
6. Noise limiter	9
7. AVC action	11
8. "S" or signal intensity meter	11
9. The second detector	11
10. The beat frequency oscillator	11
11. The audio amplifier	11
12. The power supply	11
13. Specifications	11
D. Receiver Alignment	12
1. I. F. Alignment	12
2. BFO adjustment	12
3. Noise limiter and AVC amplifier adjustment	12
4. R.F. and OSC. alignment	12

Subject *Page*

E. Table to tube socket voltages 16

F. Guarantee 16

G. List of replaceable parts 17

H. Index to parts manufacturers 37

I. Drawings illustrations

Fig. 1—IF. Selectivity 6
Fig. 2—Crystal filter schematic 8
Fig. 3—Single signal operation 8
Fig. 4—Crystal selectivity 8
Fig. 5—Noise limiter schematic 9
Fig. 6—Noise limiter action 10
Fig. 7—AVC curve 10
Fig. 8—SX28 Top view 13
Fig. 9—SX28 Rear view 13
Fig. 10—Audio fidelity curve 14
Fig. 11—Audio filter curve 14
Fig. 12—RF and Oscillator adjustment location and alignment procedure 15
Fig. 13—SX28 Schematic 38

INSTRUCTION BOOK FOR MODEL SX-28
SUPER SKYRIDER

A INSTALLATION

It is recommended that, upon receipt, the carton and then the receiver be carefully examined for any damage which might have occurred in transit. Should any sign of damage be apparent immediately file claim with the carrier stating the extent of the damage.

Important: Unless otherwise marked, this receiver is to be operated from 110-125 volts of 50/60 cycle alternating current. A universal 110-220 volt model is obtainable on order. This model can be operated at either of those two voltages with 25/60 cycle current. If the voltages are higher than indicated an external stepdown transformer must be used. A switch, mounted on the top of the universal transformer case, will allow convenient 110-220 voltage change.

The standard model SX-28 receiver comes equipped with a cabinet for table mounting. The standard 8¾" x 19" panel dimension with holes suitably spaced make it possible for the chassis to be mounted in a standard relay rack. Maximum overall chassis length is 17⅜" and depth 13½". When the model SX-28 is so mounted the table cabinet is replaced with a dust cover. The maximum over-all length of the receiver will then allow it to be mounted in a rack with upright channel clearance of 17½".

TERMINALS AND CONNECTIONS ON REAR OF RECEIVER

(1) SPEAKER

On the rear apron of the receiver's chassis appear two terminal strips for connecting either a 500 or 5000 ohm speaker to the receiver. Should a matching HALLICRAFTERS Bass-Reflex speaker be used with the receiver, it should be connected to the 5000 ohm terminals. The 500 ohm terminals can be connected to a speaker or other load of that impedance value.

(2) ANTENNA

To the terminals marked A1-A2 and G should be connected the antenna you have chosen to use with the model SX-28 receiver.

Very satisfactory results throughout the tuning range of the SX-28 will be obtained with a conventional inverted "L" Marconi type of antenna 75 to 100 feet long including lead-in. This antenna should be erected as high as possible and removed from surrounding objects. Be sure that the antenna is insulated from the ground at all points. When this type of antenna is used it is connected to terminal A-1. The Jumper between A-2 and G should remain connected.

In the event a doublet antenna is used with the model SX-28 SUPER SKYRIDER receiver, the two wires of the doublet lead-in should be connected to terminals A1 and A2. The Jumper between A2 and G can remain connected or removed, depending upon its effect on favorable reception.

A ground can be used if desired and should be connected to the G terminal. Connecting the receiver to a good ground (cold water pipe or 6 foot rod driven in moist soil) might improve reception and reduce noise. Under normal conditions no noticeable difference will exist so a ground is suggested only if it aids reception.

Should you wish to have a separate antenna for some one short wave frequency or band, a half-wave antenna cut to the proper length for the desired frequency will prove very effective. The following formula will give the length of the ½ wavelength antenna depending on the desired frequency.

$$\text{Length in feet} = \frac{463}{\text{frequency in megacycles.}}$$

or, for example, a half wave 40 meter antenna would be $\frac{463}{7} = 66.14$ feet long.

The antenna should preferably be of solid soft drawn enameled copper wire for ease in handling. The center of the wire is cut and an insulator inserted at that point. The twisted pair, or open wire transmission line, is then soldered to each 33 foot length, after the enamel has been scraped off, directly on either side of this center insulator. The other end of the transmission line should be connected to A1 and A2 on the receiver. It should be remembered that such an antenna has directional properties broadside to its length and should be so oriented if maximum pickup from a certain direction is to be expected.

In designing transmission line systems for a more accurate match of the line to the antenna input circuit, it will be helpful to know that the approximate antenna input impedance of the receiver is 400 ohms.

(3) STAND-BY SOCKET

The Send-Receive switch on the front panel makes the receiver inoperative by removing the plate voltage from the tubes when the switch is in the SEND position. Connected in parallel with this switch is the standard 110 volt receptacle on the rear chassis edge. Should you wish to make the receiver inoperative by using a remote relay or switch, connect the contacts of the relay to a standard plug, insert it in the STAND-BY switch socket and the external relay or switch will close and open the circuit so long as the SEND-RECEIVE switch on the front panel is in the SEND position.

(4) PHONO-JACK

The Phono-Jack enables you to use the high fidelity audio amplifier of the receiver for phonograph record or transcription play-back purposes. A high impedance crystal or magnetic pick-up arm should be used for this purpose and connected to a standard headphone plug. This plug is then inserted in the PHONO-JACK when record playing is desired. The receiver is inoperative to radio signals, when the plug is in the phono-jack.

The volume of the audio amplifier is varied by rotating the AF Gain control until the proper level is obtained. Removal of the plug from the Phono-Jack once more places the RF and IF portions of the receiver in operation.

(5) DC POWER SOCKET

The DC Operation Socket can be used when it is necessary to furnish power to the receiver from a direct current source. For conventional AC operation, the shorting plug must remain in the DC Operation socket. This plug should be removed for battery or vibrapack operation.

A similar plug to the shorting plug should be wired as shown in Fig. 13 and connected to the external source of DC power. The DC operation plug is then inserted in the socket and operation from batteries or a vibrapack is secured.

270 volts of plate voltage, or B supply, at 150 milliamperes current are necessary for successful operation of the receiver, should it be operated in this manner.

(6) "S" METER ZERO SET

"S" METER CONTROL is obtained by varying the knurled knob appearing on the left hand chassis apron edge. This control enables you to properly set the "S" Meter to zero. In order to make the adjustment correctly, the RF GAIN CONTROL must be advanced clockwise as far as it will go. In addition, the switch directly below the bandspread hand-wheel must be in the AVC—ON Position. When these conditions have been complied with, remove the antenna from the Receiver and then adjust the S meter control until the S meter reads zero. Reconnecting the antenna to the receiver will then make the meter indicate the relative carrier strength of each incoming signal as various signals are tuned in.

B OPERATION

Each control of the Model SX-28 SUPER SKYRIDER receiver performs a definite function that contributes to the outstanding reception capabilities of the unit. Full appreciation of the receiver is to be expected only after you have become familiar with each of the controls and the effect their operation has on the receiver's performance.

The large calibrated main dial shows the frequencies covered throughout the 6 band, 550 kc to 43 mc frequency range of the reciever. They are as follows:

Band 1—	550	to	1,600	kilocycles
Band 2—	1.6	to	3.0	megacycles
Band 3—	3.0	to	5.8	megacycles
Band 4—	5.8	to	11.0	megacycles
Band 5—	11.0	to	21.0	megacycles
Band 6—	21.	to	43.	megacycles

(1) The BAND SWITCH, directly below the main dial, will place the proper set of coils in the circuit to cover the desired frequency. The main dial is turned by the large handwheel which is equipped with a micrometer scale for maximum accuracy in resetting or logging purposes. Of particular interest is the locking clutch which will be found directly below the handwheel. This feature will allow you to lock the main dial after a desired signal has been tuned in. Subsequent movement of the handwheel will not detune the receiver because the control is provided with a clutch which disengages the handwheel once the dial lock has been set.

The International Shortwave broadcast bands are indicated on the main dial by heavier lines showing the frequencies on which these transmissions will be heard.

The Amateur band setting positions of the main dial are indicated by a small 0 appearing over the red numbers which identify each amateur band. The hairline on the main dial window should be set so that it intersects this small circle when the main dial is placed in position for the desired amateur band.

(2) The BANDSPREAD dial is calibrated for the 10-20-40 and 80 meter amateur bands. When tuning on the 160 meter band the main dial should be used.

Note: The calibration on the main dial will be accurate *only* if the bandspread condenser is set at minimum capacity which is indicated by a setting of 100 on the bandspread logging scale. It should be recognized that if the bandspread condenser is left at any other setting but 100, that small amount of bandspread condenser capacity, added to the main tuning condenser capacity, would throw off the main tuning dial calibration because the receiver is calibrated with the Bandspread condenser set at minimum capacity. The portions of the amateur bands on which type A3, or telephone, transmissions will be heard are underscored with another dark line.

The numbered outer edge of the bandspread dial will prove to be of great help for logging or pre-setting purposes when the bandspread tuning control is used for easier tuning on frequencies other than those covered bv the amateur bands.

When "bandspreading" any frequency throughout the tuning range of the receiver remember the main dial must then be set to a slightly higher frequency than the desired signal. The difference depends on the amount of bandspread condenser capacity used and the frequency of the received signal.

When switching from one range to another, an indicator moves vertically behind both the main and bandspread dials. Tuning fatigue is thereby greatly minimized by focusing attention on only the frequencies covered by that particular setting of the bandswitch.

The translucent, indirectly lighted dials are easily read and so arranged that parallax is reduced to an absolute minimum.

To operate the receiver adjust the following controls in the order in which they are mentioned:

(3) The TONE CONTROL turns the receiver *on* and *off* and in addition emphasizes either the base or treble frequencies to the extent required by various receiving conditions. The effect the Tone Control has on the fidelity of reproduction is shown in Fig. 10.

(4) Place the SEND-RECEIVE switch in the RECEIVE position—have the ANL control off (turned to the left until the switch operates).

Place the bandswitch in position .55 to 1.65 mc, which will then enable you to tune in stations on the standard Broadcast Band.

(5) Rotate the RF GAIN control to the right until #9 on the skirt of the control appears under the panel marker. (The RF Gain must be full ON as above indicated before the S meter will indicate correctly.) So that the S meter will be properly connected in the circuit, the AVC-BFO switch appearing to the lower right of the bandspread handwheel, must be in the AVC ON position.

(6) **Note:** The *Antenna Trimmer* control is operated on all Bands. Proper adjustment of this control is indicated by the maximum signal.

(7) After complying with the above conditions, the AF GAIN control should be advanced to the right until the desired volume is obtained. Tuning the receiver by operating the main dial handwheel will now allow you to pick up stations throughout the .55 to 1.65 mc tuning range of the Broadcast band. Maximum deflection of the S Meter will indicate when each station is accurately tuned in.

When covering the short-wave or higher frequency bands the above procedure should be followed—except that greater care should be used because it is so easy to completely pass over a station.

The other controls on the model SX28 SUPER SKYRIDER receiver will enable you to obtain the best results

from the receiver once you have become used to their effects on the reception of various types of signals.

(8) The SELECTIVITY control acts as a shutter or gate and varies the width of the path on which signals reach the second detector of the receiver. Six different selectivity steps are provided so that you can successfully cope with different degrees of interference. Reference to Fig. 1 and Fig. 4 will show, graphically, how the control trims the width of the signal so that what interference might be present in the signal's skirts or sidebands is effectively clipped off. Should an interfering signal lap over into the desired signal, adjustment of the SELECTIVITY control, will reduce that interference.

FIG. 1—I. F. SELECTIVITY

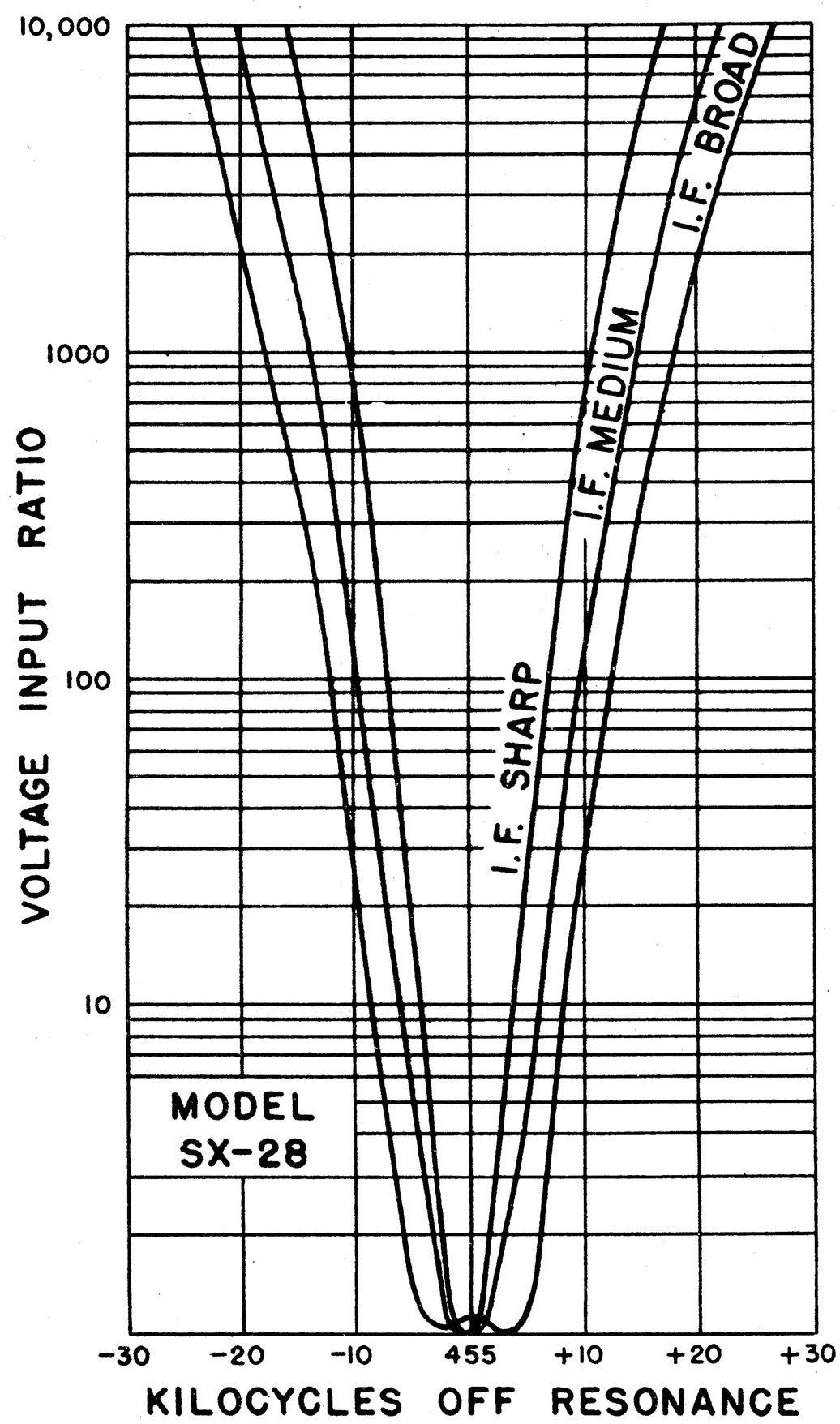

Once more refer to Fig. 1 and Fig. 4 and recognize the fact that with the control set in the BROAD IF position, the signal proper and all its parts, which are combined in the side bands, or skirts, will be passed to the 2nd detector, audio amplifier, and then Speaker. As the selectivity of the receiver is increased from BROAD-IF to XTALSHARP, the gate, or admittance path, is so narrowed that only the main portion of the signal is allowed to pass through. This fact and its effect on the quality of reproduction is readily appreciated by listening to a signal and noting the reduction in higher frequency response in the more selective settings of the switch. (See Fig. 10 and Fig. 11)

At this point, it is suggested that the CRYSTAL SHARP setting be used only in cases of extreme interference—the receiver must then be tuned exactly to the signal. Only then will the signal be intelligible because you have clipped off its sidebands in which the sibilants and overtones are embodied.

The CRYSTAL SHARP position of the selectivity switch is to be used principally for the reception of code, or CW, signals. By proper associated operation of the CRYSTAL PHASING control true single signal operation and the maximum in selectivity can be obtained (crystal circuit discussed in detail in the summary of related circuits). See Fig. 3.

(9) CRYSTAL PHASING CONTROL

The Phasing Control is in the circuit on three positions of the selectivity control namely—XTAL Sharp, XTAL Medium and XTAL Broad.

The control is used to remove heterodyne interference as well as to minimize other forms of interference having a predominance of high frequency components—such as static and interference from electrically operated devices.

(10) The A.N.L., or *Automatic Noise Limiter*, materially contributes to the satisfactory operation of the receiver by limiting objectionable interference caused by ignition systems or other man made causes of electrical disturbances. With the A.N.L. control retarded to the left as far as it will go, or until the A.N.L. switch is heard to operate—the noise limiter circuit is not functioning. Turning the control to the right closes the switch which is mounted on the control. The noise limiter is now operating. Progressively turning the control clockwise varies the threshold at which the noise limiter starts to take hold. The setting at which the control will be left depends entirely on the type and amount of interference present as well as the signal strength. The noise limiter should be judiciously adjusted because through its operation the desired signal can even be eliminated or badly distorted which destroys its usefulness. Only after you have become familiar with the operation of this control by actual practice can you determine how far it should be advanced before the best compromise between noise and signal is obtained. (See Fig. 6.)

(11) The AVC-BFO OFF-ON switch performs a dual function. The AVC circuit should be operating for the reception of telephone, or modulated, signals in order to reduce fading to a minimum. As previously mentioned, the functioning of the S Meter is dependent upon AVC action so the switch must be in the AVC ON position when the S meter is used to measure relative carrier intensity.

Inasmuch as the AVC circuit levels all signals to a predetermined value (See Fig. 7) no one signal can overload the receiver and cause distortion. At times, in searching for distant or weak signals, it might be desirous to use the full sensitivity of the Model SX-28. In that case place the AVC switch in the AVC OFF position. Remember that with the receiver operating with no AVC action, strong signals will overload the input circuit with resultant distortion. Under such a condition of operation the sensitivity of the set must be then controlled, manually, by properly retarding the RF Gain control until you have reached the point below which overloading takes place.

The other function of this switch is to turn on the Beat Frequency oscillator. When receiving code signals, a beat note is absolutely essential. With the BFO switch in the ON position, each signal tuned in will be accompanied with a beat note or whistle. For proper adjust-

ment of the BFO control which appears directly under the TONE CONTROL the following procedure is suggested. Set the BFO control to zero, now tune in a signal either voice or code. If a code signal is received, only the carrier or thump of the signal will be audible because no beat note is present. Be sure that you have the signal accurately resonated. Now, without retuning the receiver, rotate the BFO control until a beat note of the desired pitch is obtained. You now have introduced a beat note which differs from the IF frequency of the receiver, namely 455 kc, by the frequency of the audible signal. Variation of the BFO control will allow you to change the pitch, or frequency, of the oscillator which will prove to be of help under various conditions of interference.

(12) Directly under the BFO control will be seen the BASS IN-OUT Switch. With this switch in the BASS IN position you will have normal audio fidelity. Placing the switch in the BASS OUT position, the audio filter CH_2 is inserted. The effect of this filter on the band of frequencies passed is shown Fig. 11. This filter will contribute greatly to the intelligibility of the received signal when the receiver is operated in the advanced positions of selectivity.

(13) The Head Phone Jack is connected to a tap on the output transformer. The signal in the headphones is of the proper volume for satisfactory communications reception. Since no direct current is present in the headphone circuit crystal type phones can be used.

C

SUMMARY OF RELATED CIRCUITS

(1) THE 2-STAGE PRESELECTOR

The RF AMPLIFIER, or pre-selector, of the Model SX-28 SUPER SKYRIDER has 1-6AB7, 1-6SK7 tubes in cascade on Bands 3, 4, 5, and 6. On Bands 1 and 2 more than one stage is unnecessary to obtain the required image ratio and reduction of spurious interference. With two RF stages using three pre-selection circuits, the band width would be narrowed to such an extent that even expanding the IF Amplifier to its utmost would still not provide high-fidelity reception. The modern communications receiver requires two stages of preselection on the higher frequencies to accomplish only one primary object—satisfactory image rejection.

The Model SX-28 has an image ratio of 45 to 1 at 28 mc—350 to 1 at 14 mc and a proportionately increasing ratio as the frequency is lowered. While the two RF stages are principally needed to obtain such image ratios they also perform two other useful functions—more favorable signal to noise ratio and slightly increased selectivity.

Examining the coil assembly will immediately show how rigidly it is constructed and what care has been taken to completely shield each section from the other. The manner in which the RF and antenna coils are tuned on bands 3, 4, 5, and 6 will be interesting. Rather than push turns to compensate for variations in inductance, each coil is permeability tuned. This results in exact adjustment of inductance with improved tracking and gain as the result. On Bands 1 and 2 the inductance of the antenna coils is sufficiently large so that lead length differences do not cause any noticeable inductance change.

(2) THE OSCILLATOR AND CONVERTER

A separate 6SA7 tube is used as the High Frequency Oscillator in the Model SX-28 SUPER SKYRIDER. This tube proves desirable in this function because of its very high value of transconductance which enables the oscillator to operate with very little coupling to the coil. This feature reduces the unfavorable effects of tube variations and voltage fluctuations on the tuned circuit. The HF Oscillator is coupled to the 6SA7 converter tube at the Cathode Tap—a point where variations of operating parameters of the converter tube will least affect the 6SA7 Oscillator. A 6SA7 tube is used in the Mixer Circuit because tests indicated that changes in operating voltages caused less reflection in the injector grid loading than would occur in most converter tubes. Another feature in favor of the 6SA7 tube is that a negative loading is applied to the tuned circuit feeding its control grid. This characteristic improves the gain and selectivity of the tuned circuit which in turn improves the image and signal to noise ratio.

(3) THE IF AMPLIFIER

The IF Amplifier of the Model SX-28 was designed with a view towards permanency of adjustment under conditions of extreme changes in temperature and humidity as well as unusual mechanical vibration.

The first two IF Transformers are permeability tuned. In comparing this type of transformer with one having compression mica tuning condensers, it must be remembered that it takes many more turns of the adjusting screw to cause the equivalent change in tuning of the permeability tuned type. Hence a slight change in the position of the screw will have negligible effect upon the tuning. The adjusting screw is under spring tension thereby making it impossible to turn under vibration.

The diode transformer is air-tuned with two variable condensers each with a lump capacity of 50 mmf and variable of 50 mmf. These air trimmers are also under spring tension so that they can withstand considerable vibration. Being of the air tuned type, their capacity change is negligible with wide changes in humidity. Reference to the Schematic will show that the IF transformers are expanded in two steps—thereby enabling medium or full reproduction of the higher frequencies to be obtained.

(4) VARIABLE SELECTIVITY

Six ranges of selectivity are provided in the model SX-28 receiver. They are:

1—Broad IF—(for high fidelity reception)
2—Medium IF—(more selectivity—less highs)
3—Sharp IF—(reduces annoying interference—far less highs)
4—Crystal Broad—(Similar to Sharp IF but cleaner cutting of side bands)
5—Crystal Medium—(next selectivity step to #4—greatly increased sideband cutting—more pronounced crystal "Slot" for interference—very little highs present)
6—Crystal Sharp—(position of extreme selectivity—practically no sideband content—very pronounced crystal "slot")

The graphic effects of the different steps of selectivity on a signal are shown in Fig. 1 and Fig. 4.

FIG. 2—CRYSTAL FILTER SCHEMATIC

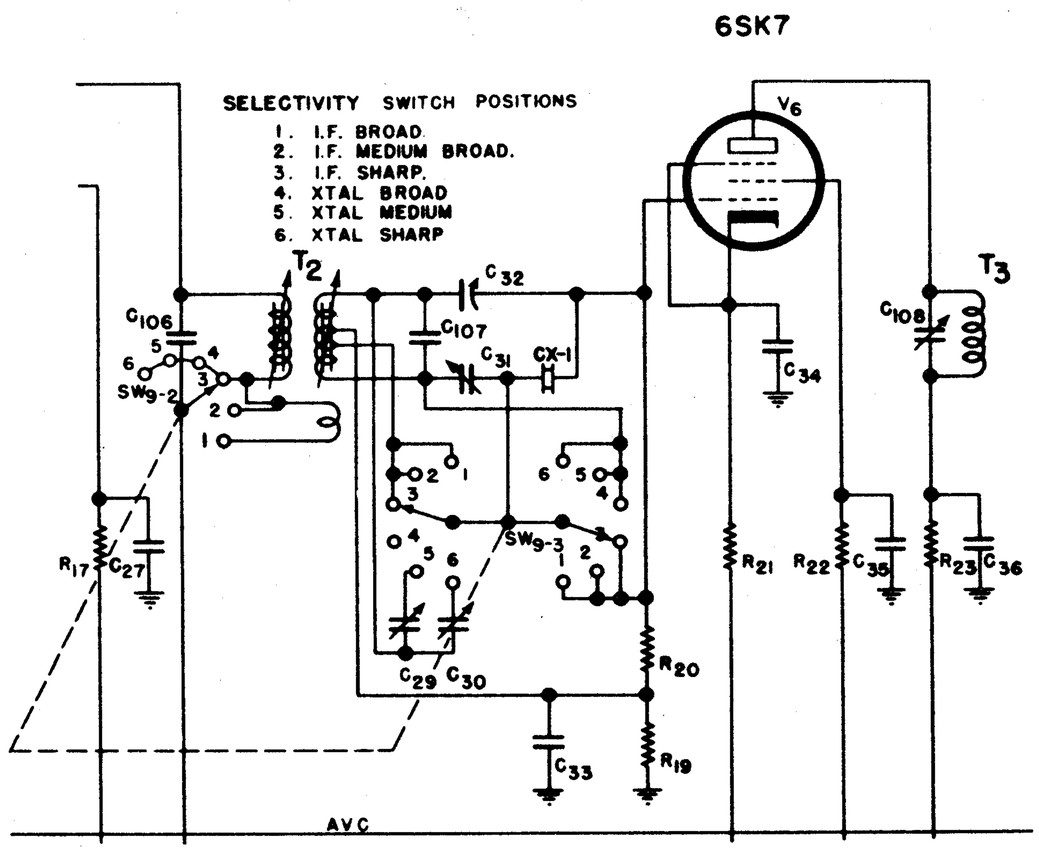

(5) CRYSTAL FILTER CIRCUIT

In positions 1, 2, 3 the crystal is short circuited. In position 4 the short across the crystal is opened and the iron core in the secondary of the transformer is adjusted for Broad Crystal Action and at this point is accurately tuned to the crystal frequency. Due to the close coupling of the secondary to the crystal, the sharply rising resonance curve of the crystal causes, in contrast, a sharply falling resonance curve in the secondary. The combined action of these two characteristics results in a relatively broad resonance curve for the CRYSTAL BROAD selectivity setting. In the MEDIUM CRYSTAL No. 5 position, C_{29} is adjusted for selectivity midway between the BROAD and CRYSTAL SHARP settings. (See Fig. 2 and Fig. 4)

In position 6, or CRYSTAL SHARP, the trimmer C_{30} is adjusted for the Sharpest crystal action. Under this condition, the Secondary is slightly detuned from the resonant crystal frequency sufficiently so that its resonance curve is not greatly affected by the crystal but still coupled tightly enough so that it can transfer energy to the crystal circuit. When this point is reached it is indicated by a rise in the output. Two such points of increased output will normally occur—one for each adjustment of the secondary on either side of the resonant frequency of the crystal.

FIG. 3—SINGLE SIGNAL OPERATION

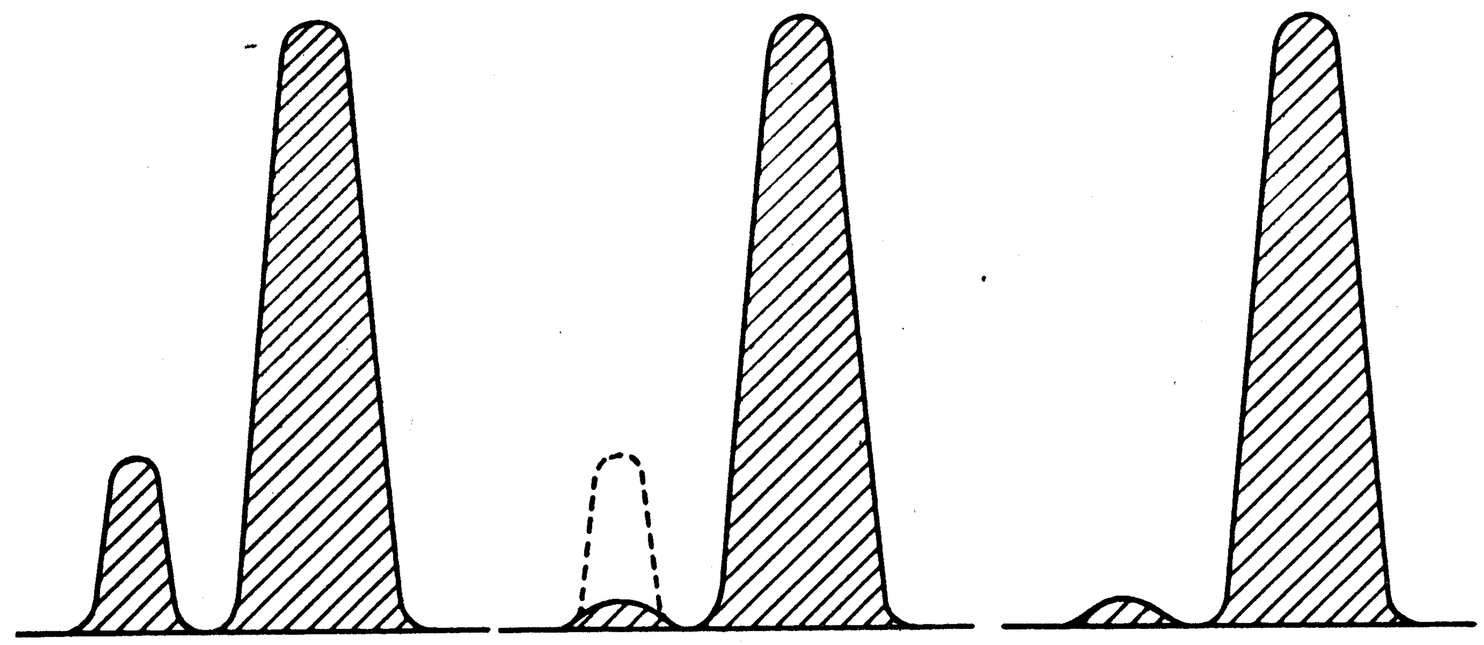

With Selective Switch in XTAL Sharp position identify the weaker amplitude—Tune Receiver to the weaker.

Adjust phasing control carefully until this weaker amplitude is reduced to a minimum.

Retune Receiver to the stronger amplitude and then adjust pitch control until you get note most pleasing to copy.

(5a)

SINGLE SIGNAL ADJUSTMENT

It is extremely simple to attain single signal reception with the SX-28. First, turn on the BFO to the desired Beat Note and turn the selectivity switch to the XTAL SHARP position. Pick a good solid CW signal, preferably a commercial station because a commercial is likely to stay on long enough for you to complete the phasing adjustment for single signal reception.

You will find on tuning across this signal that it has two amplitudes. Tune first to the weaker of these two amplitudes. Now, turn the PHASING control until this weaker of the two amplitudes is reduced to a minimum. (If the weaker amplitude appears on the right the above procedure still holds.) Then tune to stronger of the two amplitudes and adjust the BFO control to a tone most pleasing to you. This adjustment for single signal selectivity will hold with no further adjustment unless you change the phasing control. (See Fig. 3)

FIG. 4—CRYSTAL SELECTIVITY

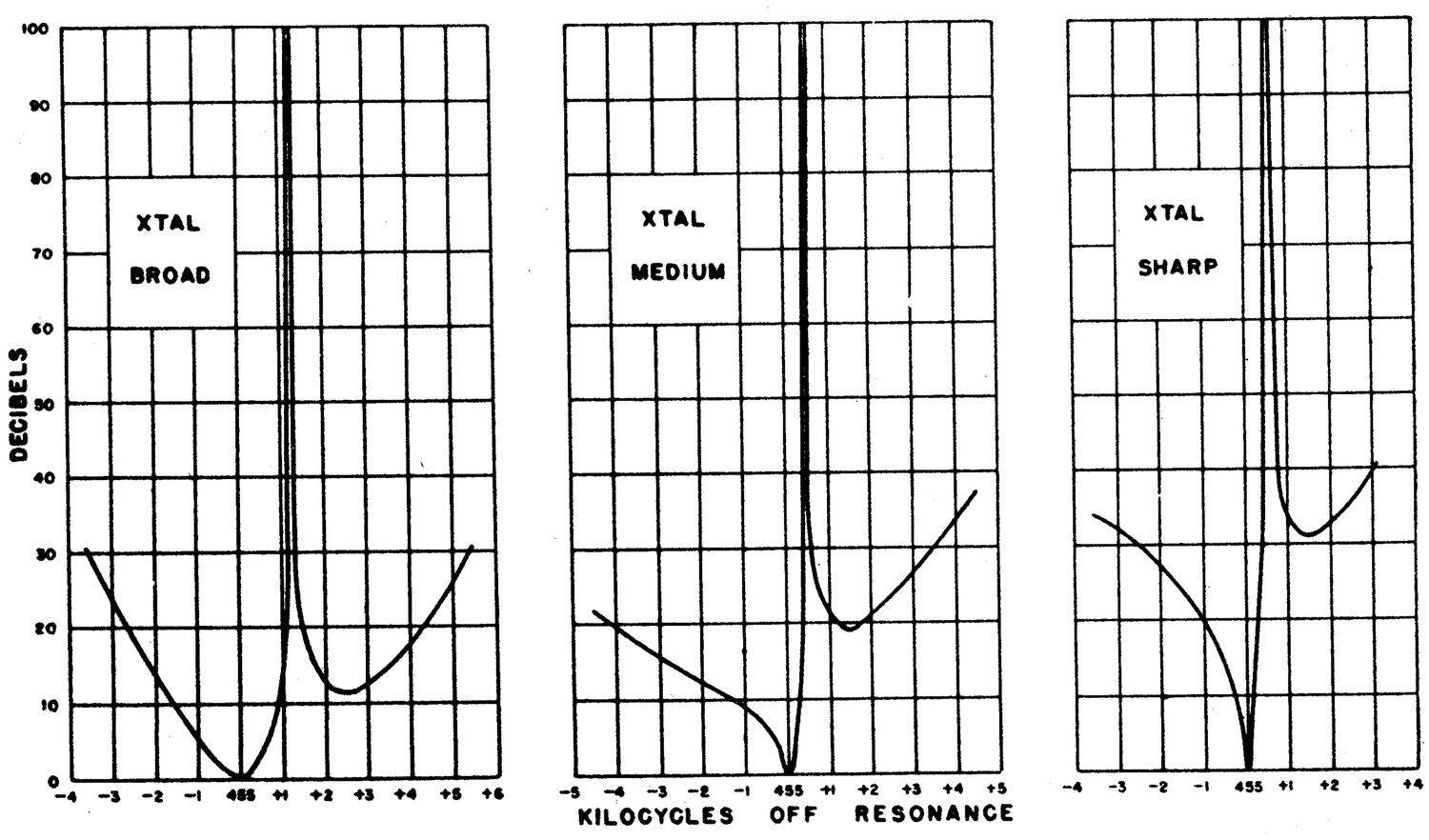

(5b)

CRYSTAL

The CRYSTAL FILTER and holder are wired directly into the receiver and do not plug in as heretofore. In this manner exceptional crystal filter action is obtained because of the elimination of the capacity and losses of a socket. So mounting the crystal prevents possible change in polarity which would occur if the crystal were improperly inserted in the circuit. The size of the crystal has been carefully determined to allow the BROAD CRYSTAL position to tune as broadly as possible. The capacity of the crystal holder has been reduced to a minimum through the use of a specially designed polystyrene holder.

(6) NOISE LIMITER

The principle of operation of the limiter is very similar to that of the Lamb limiter which has been described in detail in past issue of QST. The carrier of the received signal is first converted over to the intermediate frequency and then fed into the 6L7 amplifier and 6B8 AVC amplifier and 6AB7 noise amplifier. A broadly tuned IF transformer is used in the plate of the 6B8 with its primary and secondary closely coupled. The secondary feeds into the 6B8 diode where rectification of the carrier furnishes AVC voltage for the RF and mixer tube as well as for the 6AB7 noise amplifier. A broadly tuned IF transformer is used in the plate of the 6AB7, the secondary feeding into the 6H6 noise rectifier. A 455 kc wave trap (CH4 and C55) is used which allows the passage of the higher audio frequencies without attenuation. In the form of further explanation of our approach toward noise elimination, it must be remembered that noise in general is composed of a random mixture of high and low frequencies. Of this mixture the predominating higher frequencies are the most objectionable. It is to our advantage to retain the high frequency components. Thus, these transients will be allowed to rise to a point far above the carrier level with the result that they will be applied to the injector grid of the 6L7 tube without being reduced in value. Transients, such as ignition interference having a steep wave front, consist largely of high frequency components. The voltage applied to the grid of the 6L7 tube has a negative polarity because of the 6H6 noise rectifier. By varying the ANL control, we raise or lower the negative voltage applied to the 6L7 tube until it is barely sufficient to overcome the noise impulses applied to the grid of this tube without allowing the modulation peaks of the carrier to become badly distorted.

FIG. 5—NOISE LIMITER SCHEMATIC

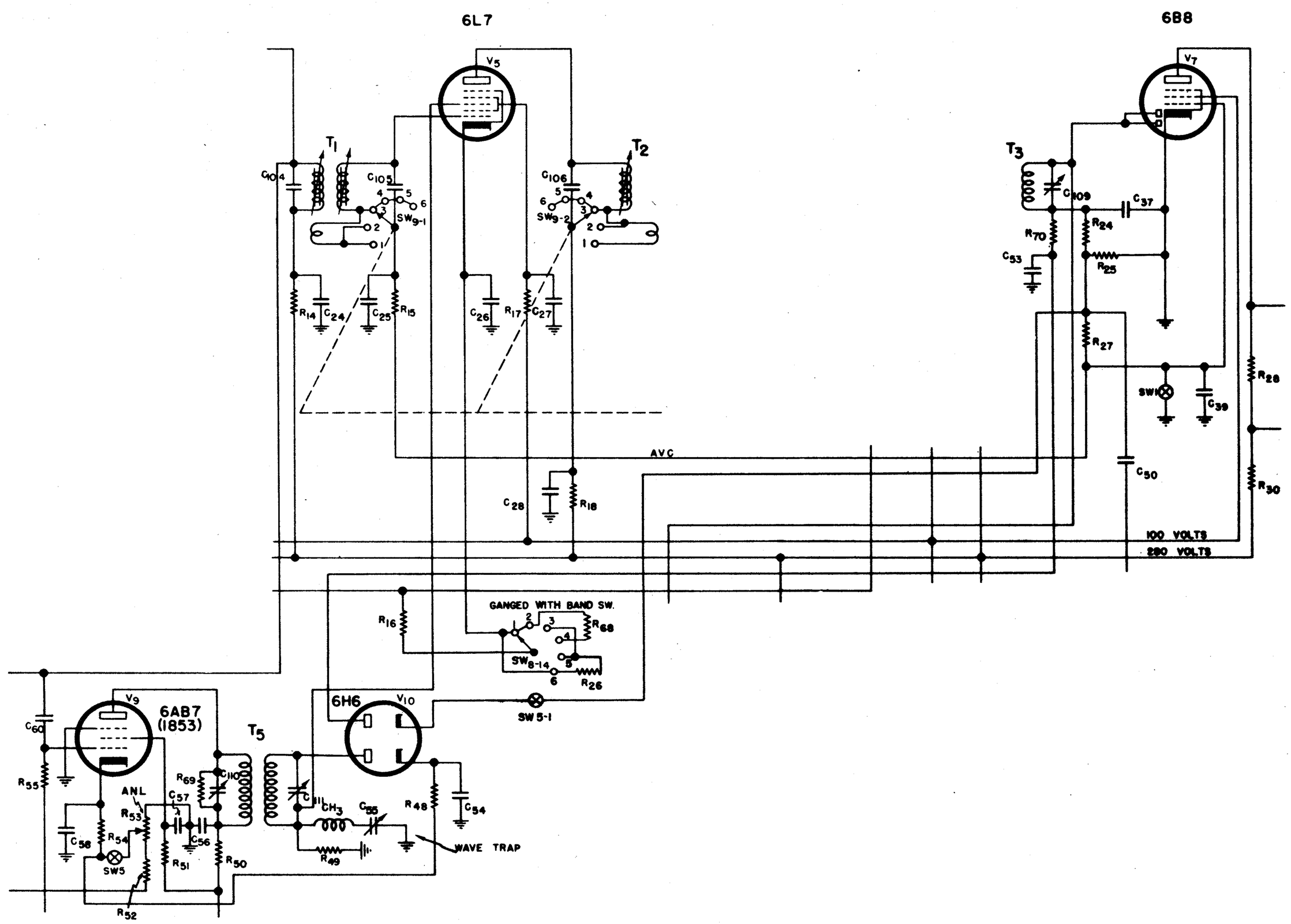

FIG. 6—NOISE LIMITER ACTION

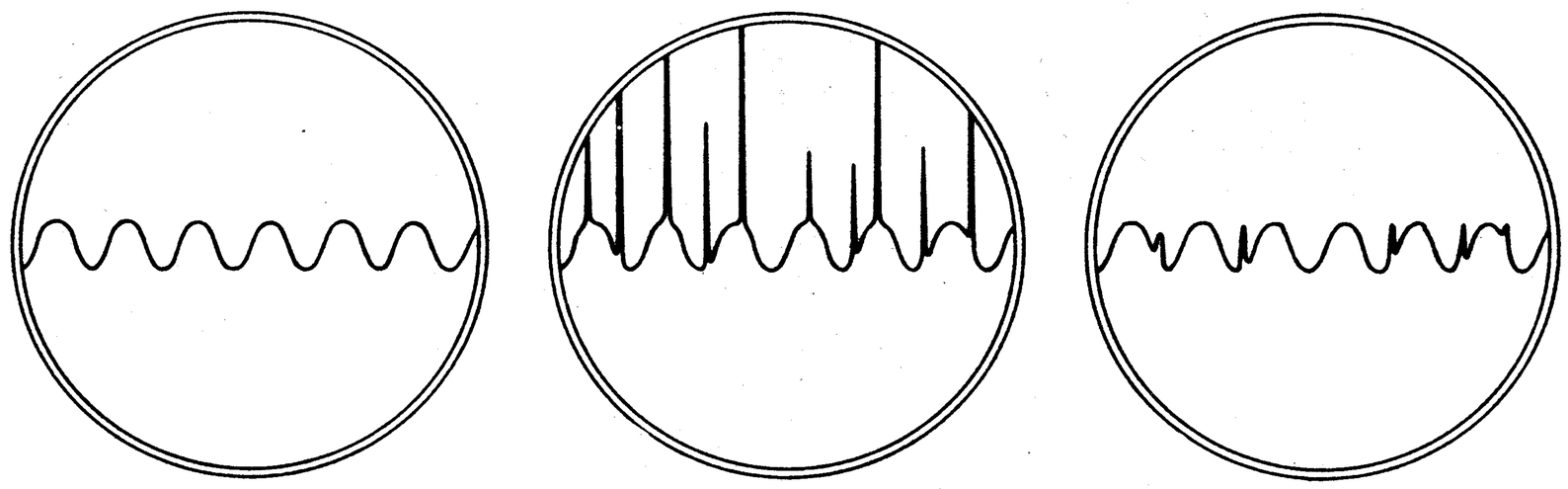

Constant tone signal no interference ANL OFF.

Same Signal ANL OFF. (Note transient peaks extend well beyond range of screen. Signal not readable.)

Same signal. Same noise. ANL-ON adjusted for most favorable signal to noise ratio.

If the noise limiter adjustment permits too great a value of transient voltage to be applied to the 6L7 injector grid, detection will take place and rectified components of this modulated carrier will appear in the 6L7 plate circuit. This effect will appear as distortion in the output of the receiver. If, on the other hand, not enough noise voltage is applied, then the momentary decrease in sensitivity will not be great enough to stop the noise from getting through and some of it will appear in the plate circuit of the 6L7 tube and consequently in the output of the receiver. As a result the noise limiter must be carefully adjusted to the particular carrier and noise level being received. (See Fig. 6)

FIG. 7—A.V.C. CURVE—AT 3 MC.

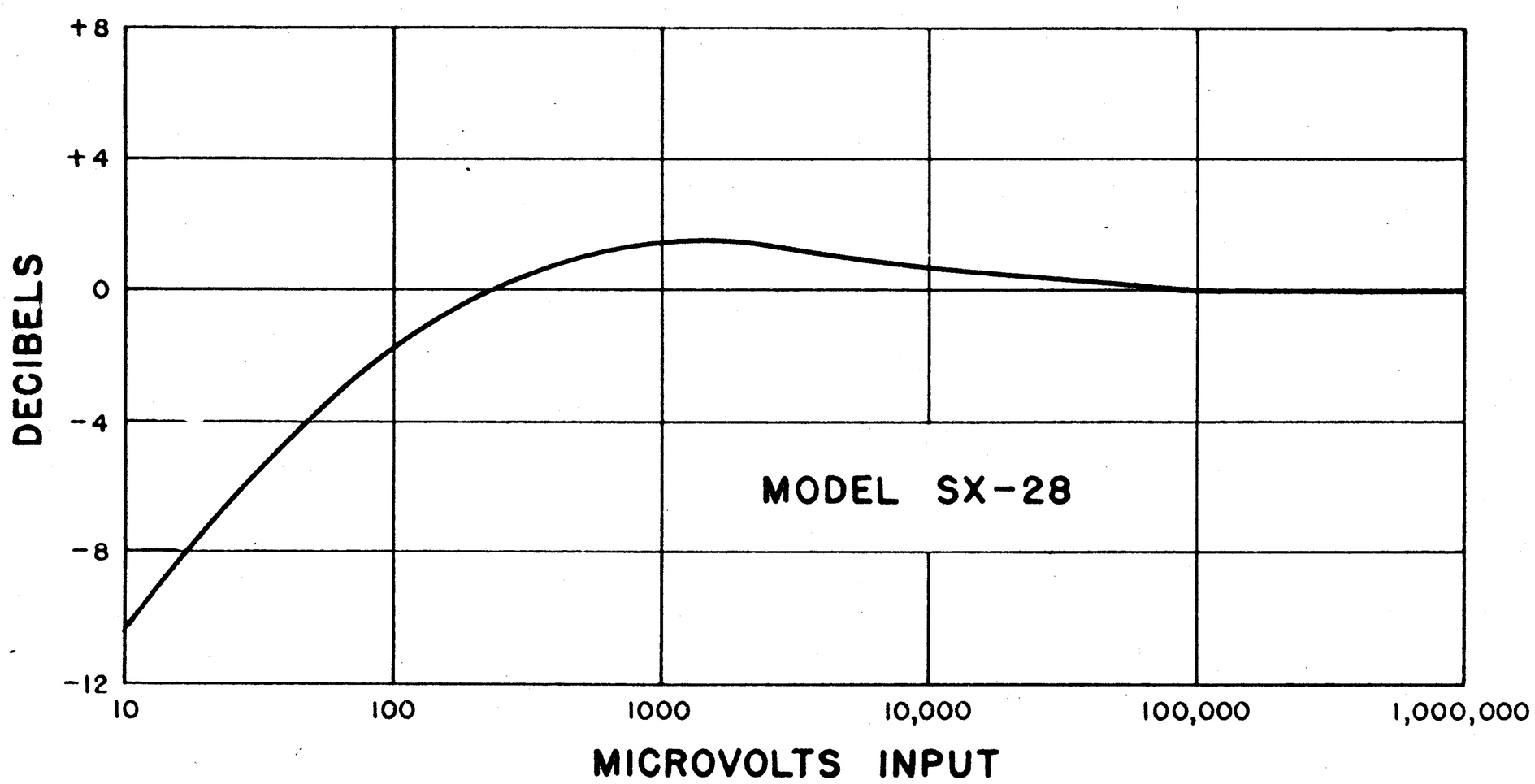

(7) AVC ACTION

A double AVC system is used. The RF and mixer tubes are operated by the broadly tuned carrier coming through only three tuned IF circuits. The final signal however passes through six-tuned IF circuits. As a result, when the signal is slightly detuned, the receiver output has dropped considerably while the AVC action has dropped but very little. This results in a reduction of between-station noise and a more sharply defined aural tuning action.

(8) "S" OR SIGNAL INTENSITY METER

The approximate DB per S unit equivalent is 6 DB's. As is known, a DB, or decibel, is a unit of change in signal level and is defined as being the least detectable change the average ear can appreciate when listening to a single pitched tone. 3DB is the least change the ear detects when listening to sounds varying in both amplitude and pitch. By comparison, a variation of one S unit on the meter will indicate a change of two detectable steps in signal level. Quantitatively, a DB gain or loss is equal to $20 \log_{10}\left(\frac{E_1}{E_2}\right)$ where E_1 = input voltage and E_2 = output voltage.

(9) THE SECOND DETECTOR

As will be noted, a diode type of second detector is used in the Model SX-28. Its choice was prompted by the fact that such a detector is capable of handling large percentages of modulation with very little distortion. This is due to the output of the diode being easily filtered (IF Removed). In addition, the rectified output contains a DC component which can be used for AVC purposes.

(10) THE BEAT FREQUENCY OSCILLATOR

The BFO is turned on with the switch below the band-spread handwheel and adjusted by the skirted knob directly below the tone control. The BFO circuit, as will be seen by referring to Fig. 13, is the well known Hartley oscillator. It will be noticed that a plate dropping resistor is used to compensate for plate voltage variations. An increase in receiver voltage causes an increase in the plate current of the oscillator. This increase in turn causes the voltage drop across the resistor to increase, thus maintaining a more constant voltage at the plate of the beat oscillator tube. A favorable ratio of capacity to inductance is used. The fixed tank capacity has been artifically aged by alternately exposing it to very high and then low temperatures. In this manner any residual strains of the component parts are removed and the capacity of the condenser remains constant. The BFO coil is permeability tuned which further removes the possibility of drift which would occur should a compression variable be used to resonate the circuit.

Proper location of the Beat Oscillator tube and its associated components plus excellent shielding and mechanical rigidity do much to keep stray fields from being established. Little BFO leakage is to be expected in the Model SX-28 so "tweets" or BFO harmonics will not prove to be bothersome.

(11) THE AUDIO AMPLIFIER

The second or output stage of the audio amplifier in the Model SX-28 receiver uses two 6V6GT tubes connected in push-pull. These tubes are driven by the 6SC7 double triode. One of the triode sections of the 6SC7 tube is used as the inverter to the 6V6GT tubes. A portion of the signal from the plate circuit of the first 6SC7 triode is fed to the grid of the other 6SC7 triode Section, thereby giving two output voltages in opposite phase suitable for exciting the push-pull 6V6GT output amplifier.

(12) THE POWER SUPPLY

The power supply in the Model SX-28 is quite normal except that it supplies voltage for the 6V6GT output tubes directly from the rectifier or before the filter system. Voltage fluctuations in the receiver are greatly reduced—increasing the audio output of the receiver and stabilizing the operation of all circuits.

The filter circuit consisting of a total of 60 mfds of capacity plus an additional filter in the 6SC7 plate supply and a 12 henry choke keep the hum level of the receiver in excess of 60 DB below maximum output. The power transformer is built to withstand continuous operation at 250 degrees F but has been designed to run at approximately 160 degrees F under normal conditions.

(13) SPECIFICATIONS

Tubes:

1—6AB7	1st RF Amplifier
1—6SK7	2nd RF Amplifier
1—6SA7	Mixer
1—6SA7	HF Oscillator
1—6L7	1st IF Amplifier Noise Limiter
1—6SK7	2nd IF Amplifier
1—6B8	2nd Detector and S meter tube
1—6B8	AVC Amplifier
1—6AB7	Noise Amplifier
1—6H6	Noise Rectifier
1—6J5	Beat Oscillator
1—6SC7	1st Audio Amplifier
2—6V6GT	Push-Pull Output Amplifiers
1—5Z3	Rectifier

Power Consumption—at 117 volts—60 cycles—138 watts
Power Consumption—DC operation—18 amp. at 6 volts or 108 watts
Power Output —8 watts undistorted
Sensitivity—(for .05 watts output) Bands 1 to 5—2 MV and under; 6th band 4 MV

	2 x	1000 x
Selectivity—IF broad (high fidelity)	12 kc	36 kc
IF Sharp	4.1 kc	22 kc

Frequency Range RF—Note: These are the actual frequencies covered corresponding to nominal figures indicated on the front panel.

550 to 1,620 kilocycles
1.5 to 3.1 megacycles
2.9 to 5.9 megacycles
5.75 to 11.5 megacycles
10.3 to 21.5 megacycles
20.4 to 43 megacycles

Frequency response AF (audio filter out—broad IF—tone control high)-70 to 3000 cycles ± 2½ DB
Speaker Output Impedances—5000 and 500 ohms
Intermediate Frequency—455 kc
Table cabinet dimensions—20½" long x 10" high x 14¾" deep
Relay Rack dust cover dimensions—14¾" deep x 17⅜" long x 8¾" high
Panel dimensions—19" x 8¾"
Chassis dimensions—17⅜" x 13½"
Weight—(unpacked)—75 lbs. packed 87 lbs.

RECEIVER ALIGNMENT

Equipment Needed for Aligning:

1—An all wave signal generator which will provide an accurately calibrated signal at the test frequencies indicated.

2—Output indicating meter connected to 5000 ohm output terminals.

3—Non-metallic screw driver.

4—Dummy antenna of 200 mmf and also 400 ohm carbon resistor.

Setting of controls prior to alignment—IF and RF.

Tone control at maximum high frequency position (#9)—BFO at 0—Bass switch at Bass IN—AF Gain at #9—RF Gain at #9—Band switch—IF alignment position .55 to 1.6 band—RF alignment depending on band aligned.

Selectivity control at sharp IF—Send-Receive switch in Receive—Crystal phasing at #3 on left side—ANL—OFF at 0—AVC OFF.

Important: Have bandspread control so logging scale reads 100.

Antenna trimmer adjusted for Maximum gain at each RF alignment point on all bands.

(1) **455 KC—IF Alignment:** Tune main dial to 1400 kc on .55 to 1.6 mc band. Connect the hot lead from the signal generator to 6SA7 mixer terminal #8—Ground to chassis. Roughly adjust the aligning screws of T1, the lower screw of which is accessible through hole in right mounting bracket, for maximum gain. Now adjust lower screw on T2 (do not adjust upper screw). Also adjust C31 and the air trimmer condensers at the top of T3 for maximum gain. (See Fig. 8 for location of IF adjustments)

Switch to Crystal Broad Position—Turn on BFO and adjust to a tone of about 1000 cycles. Vary the frequency of the signal generator while adjusting the top screw on T2 until the output goes through a maximum, dips down and starts going up again. Adjust the phasing control for maximum selectivity and then back off the top screw on T2 until the output reaches a minimum value between the two maximum values first noted. The frequency of the signal generator should be varied over a small range while adjusting the top screw of T2. A swishing note, in contrast to the usual sharp crystal tone will be apparent when the correct adjustment has been reached.

Switch to "Xtal Sharp" and adjust C_{-30} for maximum output while varying signal generator frequency. Two points of maximum output will be noted corresponding to two adjustments of C_{-30}. Either one of these points may be used at which to leave C_{-30}. a sharply peaked tone will result at the correct adjustment.

Switch to "Xtal Medium" and adjust C_{-29} till the output is midway between the outputs reached while aligning the "Xtal Sharp" and "Xtal Broad" positions. The apparent sharpness of tone should be midway between the "Sharp" and "Broad" positions.

Switch again to "Xtal Sharp" and set the signal generator to exact crystal frequency. Set BFO front panel control to a tone of approximately 1000 cycles. Switch again to "Sharp IF" and carefully realign the IF transformers as earlier described in the first paragraph of these instructions.

(2) **BFO Adjustment:** Set front panel control to zero—BFO switch ON—Signal Generator tuned to crystal frequency—selectivity switch in IF Sharp position—now, adjust screw on top of T4, after loosening lock nut, to zero best. (See Fig. 8)

(3) **Noise Limiter and AVC Amplifier Adjustment:** Have the controls set as before except that the AVC switch is now in the ON position. Connect a high resistance type voltmeter across R47 which is connected between terminal #5 of the 6L7 tube and chassis. Connect a 50,000 ohm resistor across primary of T5 (Red and Blue leads). Set generator at 455 kc as for IF alignment. Connect generator to grid of 6AB7 tube (pin #4). Rotate ANL control all the way to the right, or position #9. Adjust screws on top of T5 for maximum indication on DC meter connected across R47. Reconnect generator, as for IF alignment, to mixer grid of 6SA7 tube. Remove 50,000 ohm resistor which was inserted across primary of T5 during alignment. Remove grid clip off top of 6L7 tube. With generator set at 455 kc and ANL control at extreme right adjust wave trap trimmer C55 for minimum signal as indicated on output meter. (See Fig. 8 and Fig. 12 for location of adjustments).

With generator connected to 6SA7 mixer grid as above, replace 6L7 grid and turn ANL control to extreme left until switch clicks. Connect high resistance DC meter across 6B8 diode filter condenser C64. Adjust screw on top of T6 for maximum indication on DC meter across C64.

(4) For RF and oscillator adjustment location and alignment procedure see Fig. 12.

FIG. 8—SX28—TOP VIEW

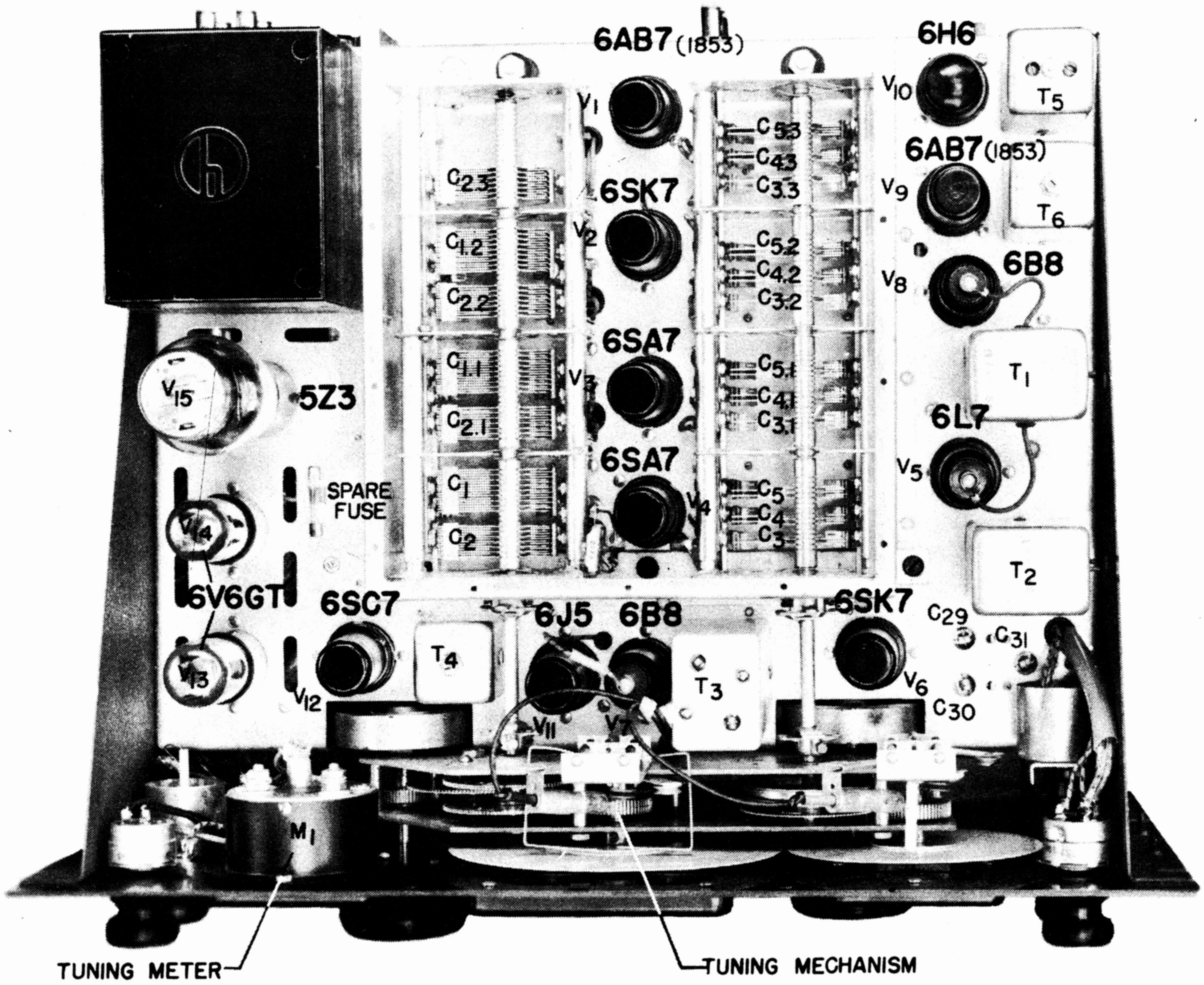

FIG. 9—SX28—REAR VIEW

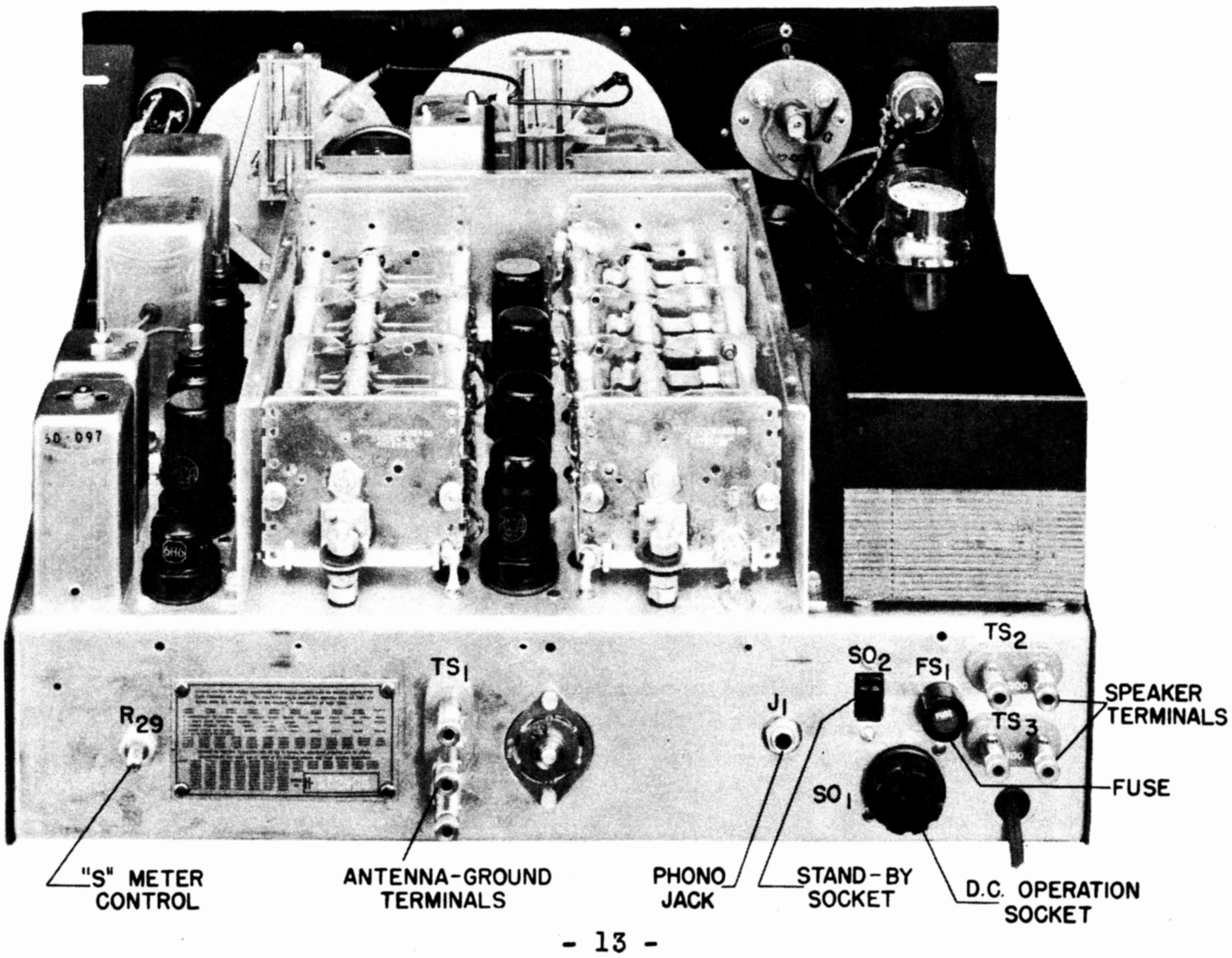

FIG. 10—AUDIO FIDELITY CURVE

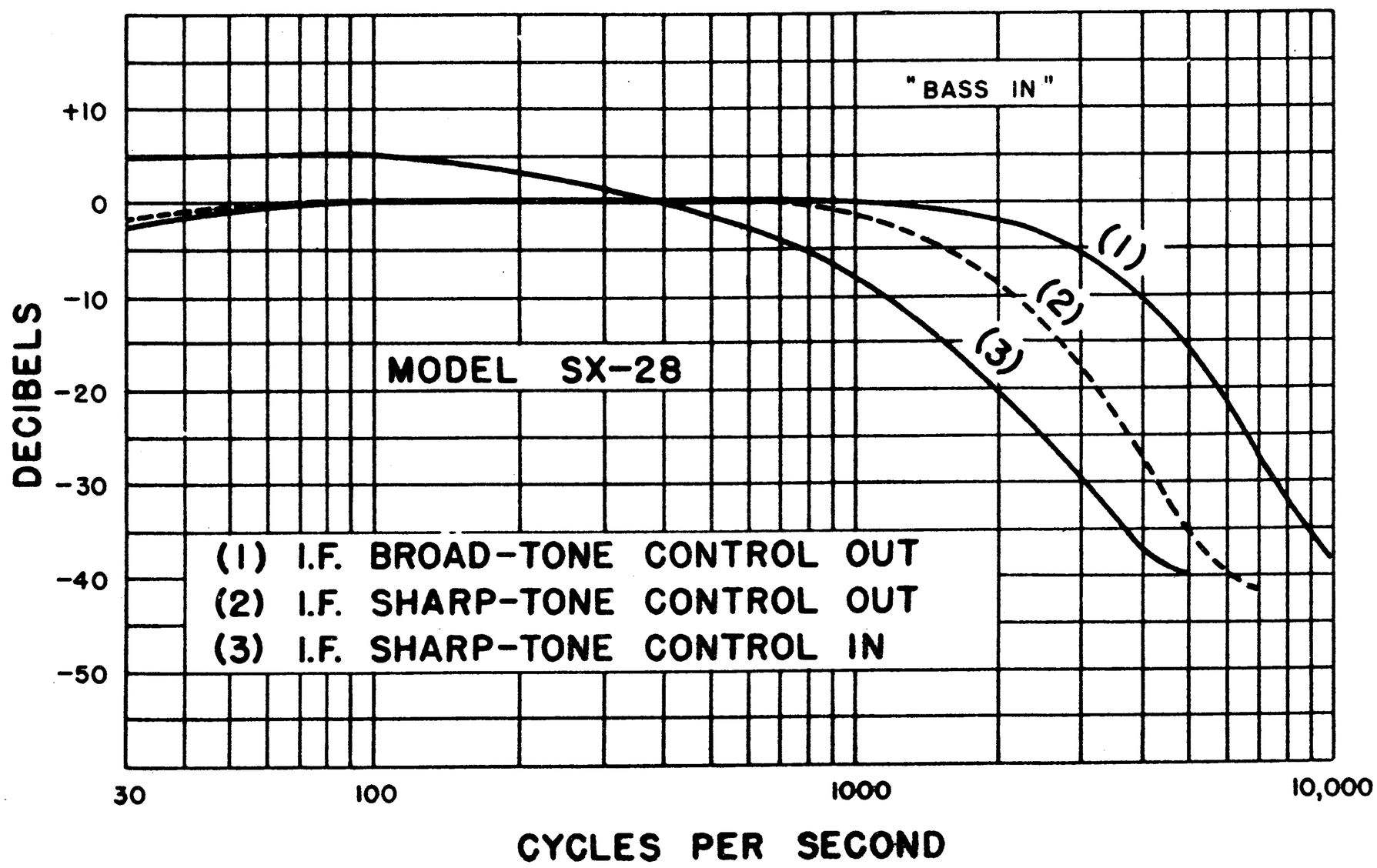

FIG. 11—AUDIO FILTER CURVE

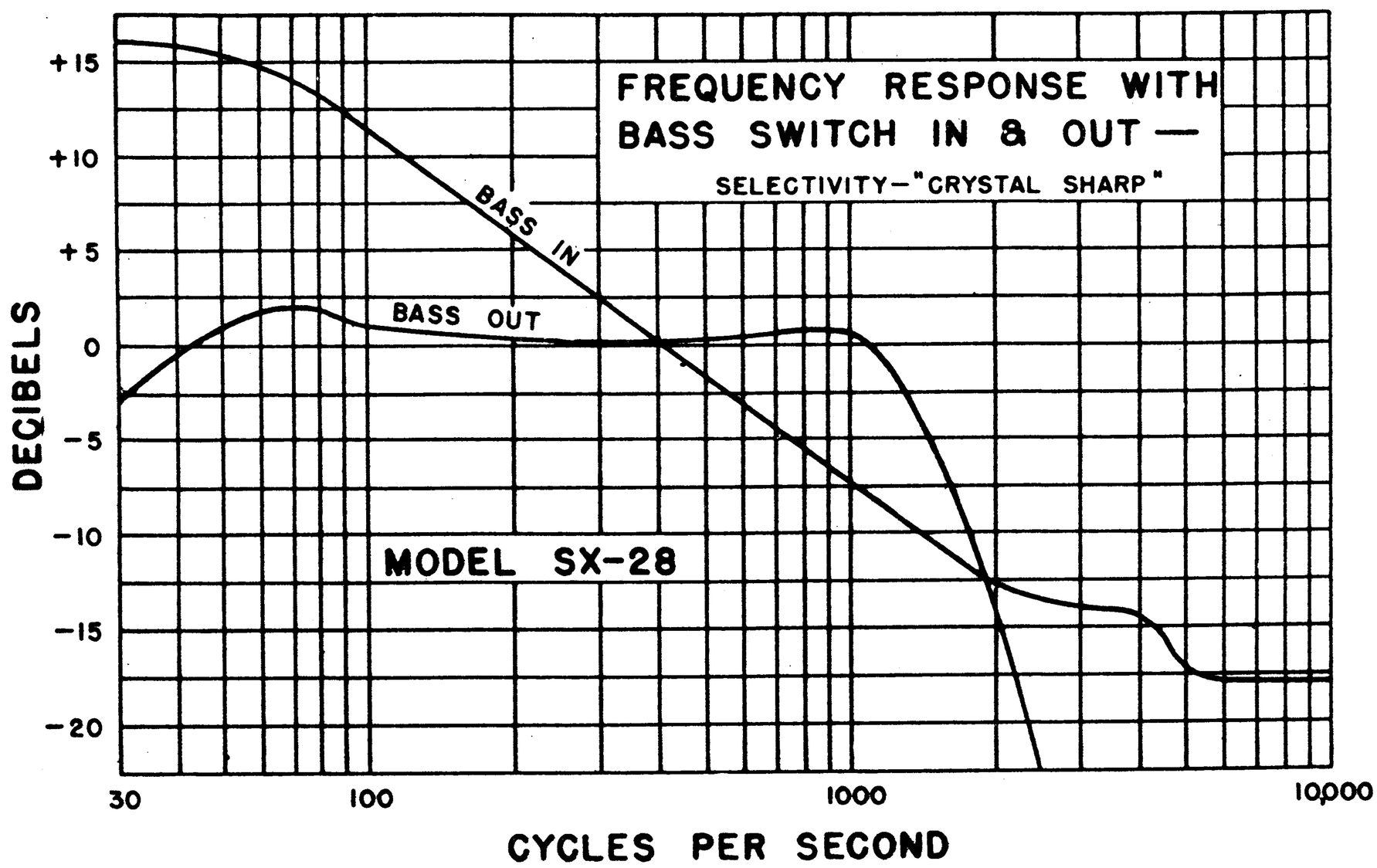

FIG. 12—RF AND OSC ADJUSTMENT LOCATION AND ALIGNMENT PROCEDURE

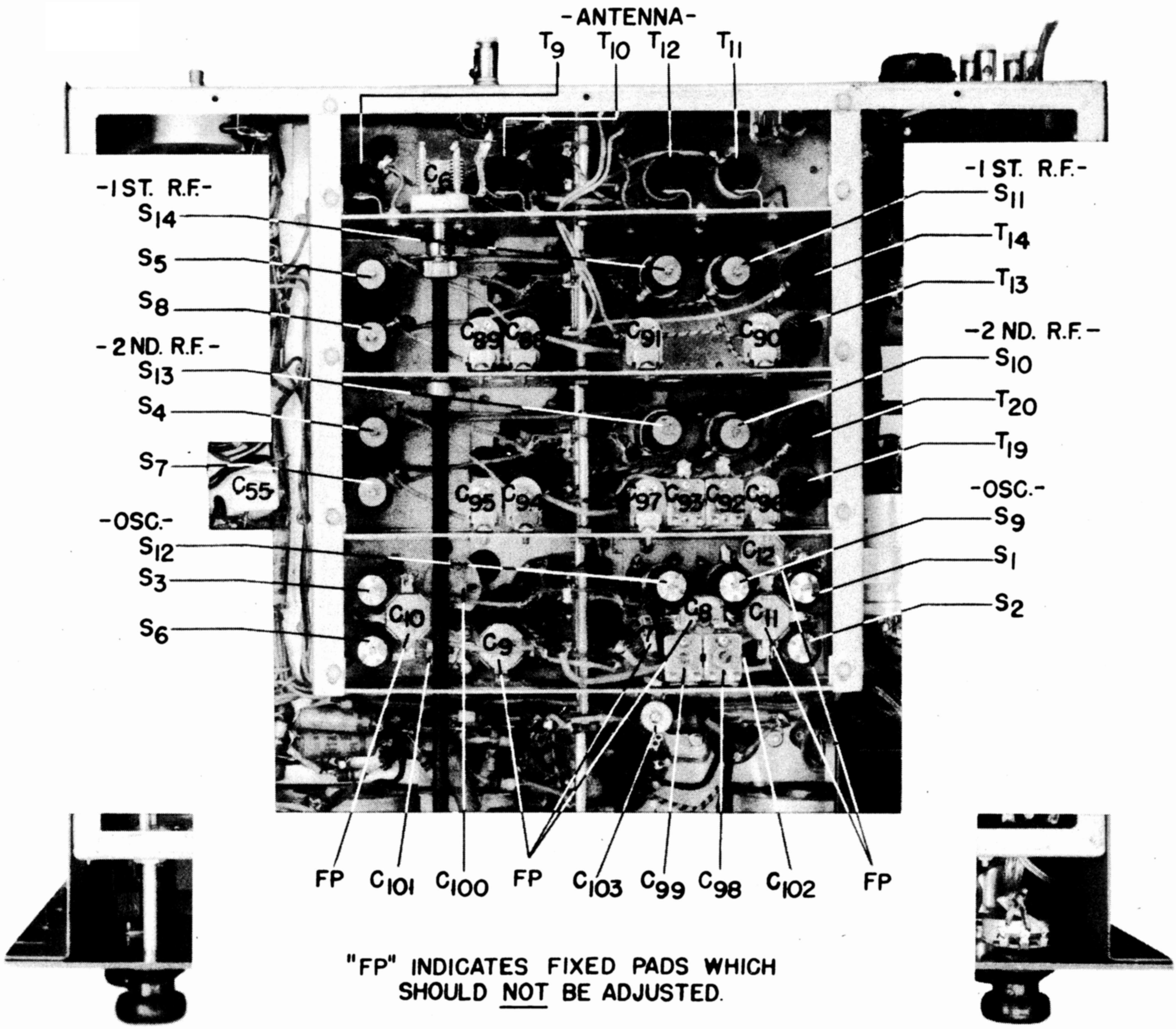

"FP" INDICATES FIXED PADS WHICH SHOULD NOT BE ADJUSTED.

RF & OSC. ALIGNMENT PROCEDURE

Connect hot lead of signal generator to A_1—through dummy antenna shown in table. Leave jumper connected between A_2 and G. Ground of Generator to Chassis.

Band	Rec. Dial Setting	Sig. Gen. Freq.	Dummy Antenna	HIGH FREQUENCY END		LOW FREQUENCY END	
				Adjust Osc. With	Adjust Trimmers for Max. Gain	Adjust Osc. With	Permeability Tuned By
1	1.4 mc	1.4 mc	200 mmf	C_{98}	C_{92}	....	.....
1	.6	.6	200 mmf	....	.....	S_1	.....
2	2.8	2.8	400 ohms	C_{99}	C_{93}	....	.....
2	1.6	1.6	400 ohms	....	.....	S_2	.....
3	5.6	5.6	400 ohms	C_{100}	C_{94} C_{88}	....	.....
3	3.2	3.2	400 ohms	....	.....	S_3	S_4 S_5
4	11	11	400 ohms	C_{101}	C_{95} C_{89}	....	.....
4	6	6	400 ohms	....	.....	S_6	S_7 S_8
5	20	20	400 ohms	C_{102}	C_{96} C_{90}	....	.....
5	11	11	400 ohms	....	.....	S_9	S_{10} S_{11}
6	36	36	400 ohms	C_{103}	C_{97} C_{91}	....	.....
6	22	22	400 ohms	....	.....	S_{12}	S_{13} S_{14}

E

The following measurements made with a 20,000 ohms per volt meter and taken from the socket terminal indicated to ground or receiver chassis. Antenna and ground were disconnected from the receiver when these measurements were taken and the RF and AF gain controls set at maximum. "DL" means Dead Lug but will indicate voltage when used as a tie. Normal tolerance allows a variation of ±10% from the indicated values.

TUBE	FUNCTION	SOCKET TERMINALS								
		1	2	3	4	5	6	7	8	Cap.
V_1-6AB7	RF Amp. (1)	...	...	...	0.1	4.15	170	6.3	227	.....
V_2-6SK7	RF Amp. (2)	...	...	4.35	0.1	4.35	105	6.3	279	.....
V_3-6SA7	Mixer	...	...	250	100	0.12	4.1	6.3	...	.....
V_4-6SA7	HF Osc.	...	...	116	116	0.3	...	6.3	116	.....
V_5-6L7	IF Amp. (1) Noise Limiter	...	...	245	102	...	...	6.3	4	−.075
V_6-6SK7	IF Amp. 2	...	...	4	...	4	107.5	6.3	235	.....
V_7-6B8	2nd Det. S Meter Tube	...	...	17.2	−.255	−.255	108	6.3	...	−.17
V_8-6B8	AVC Amp.	...	...	225.5	0.2	0.2	107	6.3	2	.....
V_9-6AB7	Noise Amp.	...	...	...	.07	1.1	150	6.3	225	.....
V_{10}-6H6	Noise Rectifier	...	...	...	.1	...	17.6 DL	6.3	—.1	.....
V_{11}-6J5	Beat Osc.	...	...	140	...	−7.4	...	6.3	...	BFO ON ONLY FOR TEST
V_{12}-6SC7	1st Audio Amp.	...	140	...	...	137	1.4	6.3	...	.....
V_{13}-6V6GT	P.P. Audio Amp.	...	...	310	290	...	198 DL	6.3	17	.....
V_{14}-6V6GT	P.P. Audio Amp.	...	...	310	290	...	...	6.3	17	.....
V_{15}-5Z3	Rectifier *	320	340 AC	340 AC	320	...	...	...	...	.....

* 5 V. AC between Terminals 1 & 4

F

GUARANTEE

This receiver is guaranteed to be free from any defect in workmanship and material that may develop within a period of ninety (90) days from date of purchase, under the terms of the standard guarantee, as designated by the Radio Manufacturers Association. Any part or parts that prove defective within this period will be replaced without charge when subjected to examination at our factory, providing such defect, in our opinion, is due to faulty material or workmanship, and not caused by tampering, abuse or normal wear. All such adjustments to be made FOB the factory.

Should this receiver require any adjustments, your dealer or distributor has complete technical service information, or the factory will be glad to assist you in any problem direct.

Should it be necessary to return any part or parts to the factory, a "Return Material Permit" must be obtained in advance by first writing the Adjustment Department, who will issue due authorization under the terms of the guarantee.

The Hallicrafters Company reserve the right to make changes in design or add improvements to instruments manufactured by them, without incurring any obligation to install the same in any instrument previously purchased.

All Hallicrafters receivers are built under patents of Radio Corporation of America and Hazeltine Corporation

G. LIST OF REPLACEMENT PARTS MODEL SX-28

SYMBOL	NAME AND FUNCTION	DESCRIPTION	MFGR.	MANUFACTURER'S PART NUMBER	HALLICRAFTER'S PART NUMBER
C_1	Capacitor - Band 1 oscillator tuning (in parallel with C_2)	250 mmfd max. capacity variable air	RC		
$C_{1.1}$	Capacitor - Band 1 mixer tuning (in parallel with $C_{2.1}$)	Same as C_1			
$C_{1.2}$	Capacitor - Band 1 antenna tuning (in parallel $C_{2.2}$)	Same as C_1			
C_2	Capacitor - Bands 2, 3, 4, 5 and 6 oscillator tuning	187.5 mmfd. max. capacity variable air	RC		C_1, $C_{1.1}$, $C_{1.2}$, C_2, $C_{2.1}$, $C_{2.2}$, and $C_{2.3}$ on same frame and ganged together Unit 48B050
$C_{2.1}$	Capacitor - Bands 2, 3, 4, 5 and 6 mixer tuning	Same as C_2			
$C_{2.2}$	Capacitor - Bands 2, 3, 4, 5 and 6 2nd R.F. tuning	Same as C_2			
$C_{2.3}$	Capacitor - Bands 2, 3, 4, 5 and 6 1st R.F. tuning	Same as C_2			
C_3	Capacitor - Bandspread oscillator tuning (80 and 20 meter bands)	16 mmfd. max.capacity variable air	RC		
$C_{3.1}$	Capacitor - Bandspread mixer tuning (80 and 20 meter bands)	Same as C_3			
$C_{3.2}$	Capacitor - Bandspread 2nd R.F. tuning (80 and 20 meter bands)	Same as C_3			C_3, $C_{3.1}$, $C_{3.2}$, $C_{3.3}$, C_4, $C_{4.1}$, $C_{4.2}$, $C_{4.3}$, C_5, $C_{5.1}$, $C_{5.2}$ and $C_{5.3}$, on same frame and ganged together Unit 485051
$C_{3.3}$	Capacitor - Bandspread 1st R.F. tuning (80 and 20 meter bands)	Same as C_3			
C_4	Capacitor - Bandspread oscillator tuning (80 and 40 meter bands)	23 mmfd. max.capacity variable air	RC		
$C_{4.1}$	Capacitor - Bandspread mixer tuning (80 and 40 meter bands)	Same as C_4			
$C_{4.2}$	Capacitor - Bandspread 2nd R.F. tuning (80 and 40 meter bands)	Same as C_4			

LIST OF REPLACEMENT PARTS - Continued

SYMBOL	NAME AND FUNCTION	DESCRIPTION	MFGR.	MANUFACTURER'S PART NUMBER	HALLICRAFTER'S PART NUMBER
$C_{4.3}$	Capacitor - Bandspread 1st RF tuning (80 and 40 meter bands)	Same as C_4			
C_5	Capacitor - Bandspread oscillator tuning (80 and 10 meter bands)	28 mmfd. max. capacity variable air	RC		C_3, $C_{3.1}$, $C_{3.2}$, $C_{3.3}$, C_4, $C_{4.1}$, $C_{4.2}$, $C_{4.3}$, C_5, $C_{5.1}$, $C_{5.2}$, $C_{5.3}$, on same frame and ganged together Unit 485051
$C_{5.1}$	Capacitor - Bandspread mixer tuning (80 and 10 meter bands)	Same as C_5			
$C_{5.2}$	Capacitor - Bandspread 2nd RF tuning (80 and 10 meter bands)	Same as C_5			
$C_{5.3}$	Capacitor - Bandspread 1st RF tuning (80 and 10 meter bands)	Same as C_5			
C_6	Capacitor-Antenna transformer trimmer Manual control-all bands	5-50 mmfd. variable air	RC		48A053
C_7	Capacitor - Oscillator padding - Band 6	2160 mmfd. (nominal)-variable mica compression	UE	#1846	44A063
C_8	Capacitor - Oscillator padding - Band 5	2962 mmfd. (nominal)-variable mica compression	UE	#1842	44A061
C_9	Capacitor - Oscillator padding - Band 4	2276 mmfd. (nominal)-variable mica compression	UE	#1841	44A060
C_{10}	Capacitor - Oscillator padding - Band 3	1600 mmfd. (nominal)-variable mica compression	UE	#1845	44A059
C_{11}	Capacitor - Oscillator padding - Band 2	876 mmfd. (nominal)-variable mica compression	UE	#1844	44A058
C_{12}	Capacitor - Oscillator padding - Band 1	515 mmfd. (nominal)-variable mica compression	UE	#1843	44A057
C_{13}	Capacitor - Oscillator stabilization	Temperature compensating	UE	S-2739	44A062
C_{14}	Capacitor - 1st R.F.-(V_1) Cathode by-pass	.02 mfd. -10% + 40% 400 v. dc. working tubular paper	SP		46AW203J
C_{15}	Capacitor - 1st R.F.-(V_1) screen by-pass	Same as C_{14}			

LIST OF REPLACEMENT PARTS - Continued

SYMBOL	NAME AND FUNCTION	DESCRIPTION	MFGR.	MANUFACTURER'S PART NUMBER	HALLICRAFTER'S PART NUMBER
C_{16}	Capacitor - 1st R.F.-(V_1) plate return by-pass (transformer primary isolation)	.02 mfd. -10% + 40% 600 v. dc. working tubular paper	SP		46AY203J
C_{17}	Capacitor - 2nd R.F.-(V_2) grid return by-pass (transformer secondary isolation)	.05 mfd. -10% + 40% 200 v. dc. working tubular paper	SP		46AU503J
C_{18}	Capacitor - 2nd R.F.-(V_2) cathode and suppressor by-pass	Same as C_{14}			
C_{19}	Capacitor - 2nd R.F.-(V_2) screen by-pass	Same as C_{14}			
C_{20}	Capacitor - 2nd R.F. (V_2) plate return by-pass (transformer primary isolation)	Same as C_{16}			
C_{21}	Capacitor - Mixer (V_3) grid return by-pass (transformer secondary isolation)	Same as C_{17}			
C_{22}	Capacitor - Mixer (V_3) cathode by-pass	Same as C_{14}			
C_{23}	Capacitor - Mixer (V_3) screen by-pass	Same as C_{14}			
C_{24}	Capacitor - Mixer (V_3) plate return by-pass (T_1 primary isolation)	Same as C_{16}			
C_{25}	Capacitor - 1st I.F. (V_5) grid return by-pass (T_1 secondary)	2000 mmfd. ± 20% 500 v. dc. working mica	A CD	Type 1467 Type 1W	47BV202F
C_{26}	Capacitor - 1st I.F. (V_5) cathode by-pass	Same as C_{17}			
C_{27}	Capacitor - 1st I.F. (V_5) screen by-pass	Same as C_{14}			
C_{28}	Capacitor - 1st I.F. (V_5) plate return by-pass (T_2 primary isolation)	Same as C_{16}			
C_{29}	Capacitor - "XTAL-Medium" adjustment	2-6 mmfd. variable ceramic	CRL	820A	44A079
C_{30}	Capacitor - "XTAL-Sharp" adjustment	4-20 mmfd. variable ceramic	CRL	820B	44AP78
C_{31}	Capacitor - "I.F.-Sharp" adjustment	Same as C_{30}			

LIST OF REPLACEMENT PARTS - Continued

SYMBOL	NAME AND FUNCTION	DESCRIPTION	MFGR.	MANUFACTURER'S PART NUMBER	HALLICRAFTER'S PART NUMBER
C_{32}	Capacitor - Crystal phasing adjustment Manual Control	5-25 mmfd. variable air	RC		48A039
C_{33}	Capacitor - 2nd I.F. (V_6) grid return by-pass (T_2 secondary)	Same as C_{14}			
C_{34}	Capacitor - 2nd I.F. (V_6) cathode and suppressor by-pass	Same as C_{17}			
C_{35}	Capacitor - 2nd I.F. (V_6) screen by-pass	Same as C_{14}			
C_{36}	Capacitor - 2nd I.F. (V_6) plate return by-pass (T_3 primary isolation)	Same as C_{16}			
C_{37}	Capacitor - Diode return by-pass (R.F. filter)	50 mmfd. ±20% 500 v. dc. working mica	A CD	Type 1468 Type 5W	47BU500F
C_{38}	Capacitor - 2nd RF coupling Band 2 (V_2 to V_3)	5-6½ mmfd. fixed ceramic 500 v. dc. working	CRL	Class D	47A005
C_{39}	Capacitor - AVC by-pass at 2nd detector (V_7)	Same as C_{14}			
C_{40}	Capacitor - R.F. by-pass (plate of V_{12} 1st audio)	500 mmfd. ±20% 500 v. dc. working mica low loss	A CD	Type 1468L Type 5WL	47BU501F-L
C_{41}	Capacitor - 1st audio (V_{12}) cathode by-pass	40 mfd. -10% +40% 25 v. dc. working electrolytic	SP		C_{41} and C_{44} Part of 42-032
C_{42}	Capacitor - Tone control condenser	Same as C_{16}			
C_{43}	Capacitor - Bass choke (CH_2) resonating condenser	5000 mmfd. ±10% 300 v. dc. working mica	A CD	Type 1467 Type 1W	47BV502E
C_{44}	Capacitor - 1st audio (V_{12}) plate supply isolation and stabilization	10 mfd. -10% +40% 300 v. dc. working electrolytic	SP		C_{41} and C_{44} Part of 42-032
C_{45}	Capacitor - 1st audio coupling condenser (V_{12} to V_{14})	.05 mfd. -10% +40% 400 v. dc. working tubular paper	SP		46AW503J

LIST OF REPLACEMENT PARTS - Continued

SYMBOL	NAME AND FUNCTION	DESCRIPTION	MFGR.	MANUFACTURER'S PART NUMBER	HALLICRAFTER'S PART NUMBER
C_{46}	Capacitor - Phase inverter plate coupling condenser (V_{12} to V_{13})	Same as C_{45}			
C_{47}	Capacitor - Audio power cathode by-pass (V_{13} & V_{14})	40 mfd. -10% +40% 25 v. dc. working electrolytic	SP		C_{47} and C_{48} Part of 42-031
C_{48}	Capacitor - Power supply output filter	30 mfd. -10% +40% 400 v. dc. working electrolytic			
C_{49}	Capacitor - Power supply input filter	30 mfd. -10% +40% 450 v. dc. working electrolytic	SP		42-030
C_{50}	Capacitor - Detector to AF gain control coupling condenser	Same as C_{14}			
C_{51}	Capacitor - Power line by-pass	.01 mfd. -10% +40% 600 v. dc. working tubular paper	SP		46AY103J
C_{52}	Capacitor - Power line by-pass	Same as C_{51}			
C_{53}	Capacitor - ANL by-pass	Same as C_{17}			
C_{54}	Capacitor - ANL cathode by-pass (V_{10})	Same as C_{45}			
C55	Capacitor - Wave trap resonating trimmer	50 mmfd. (nominal)-variable mica compression	SWI	SW-1530	C_{55} and CH_3 Part of 53A012
C_{56}	Capacitor - Noise amplifier (V_9) plate return by-pass (T_5 primary isolation)	Same as C_{16}			
C_{57}	Capacitor - Noise amplifier (V_9) screen by-pass	Same as C_{14}			
C_{58}	Capacitor - Noise amplifier (V_9) cathode by-pass	Same as C_{17}			
C_{59}	Capacitor - Noise amplifier (V_9) grid circuit isolation	Same as C_{17}			
C_{60}	Capacitor - Noise amplifier (V_9) grid coupling condenser	Same as C_{37}			

LIST OF REPLACEMENT PARTS - Continued

SYMBOL	NAME AND FUNCTION	DESCRIPTION	MFGR.	MANUFACTURER'S PART NUMBER	HALLICRAFTER'S PART NUMBER
C_{61}	Capacitor - AVC amplifier (V_8) grid coupling condenser	250 mmfd. ±20% 500 v. dc. working mica (inside T_1)	A CD	Type 1468 Type 5W	47BU251F
C_{62}	Capacitor - AVC amplifier (V_8) screen by-pass	Same as C_{14}			
C_{63}	Capacitor - AVC amplifier (V_8) cathode and suppressor by-pass	Same as C_{17}			
C_{64}	Capacitor - RF filter - diode return AVC amplifier (V_8)	100 mmfd. ±20% 500 v. dc. working mica	A CD	Type 1468 Type 5W	47BU101F
C_{65}	Capacitor - AVC by-pass Bands 2, 3, 4, 5 and 6	Same as C_{14}			
C_{66}	Capacitor - AVC by-pass Band 1	Same as C_{17}			
C_{67}	Capacitor - AVC amplifier (V_8) plate return by-pass (T_6 primary isolation)	Same as C_{16}			
C_{68}	Capacitor - Injector grid coupling (V_3)	Same as C_{37}			
C_{69}	Capacitor - Oscillator grid coupling (V_4)	Same as C_{37}			
C_{70}	Capacitor - Oscillator plate return by-pass (T_{30} primary isolation)	Same as C_{25}			
C_{71}	Capacitor - BFO grid coupling (V_{11})	Same as C_{64}			
C_{72}	Capacitor - BFO pitch control - Manual control	5-25 mmfd. variable air	RC		48-064
C_{73}	Capacitor - BFO fixed resonating condenser	500 mmfd. ±5% 500 v. dc. working silver-mica (inside T_4)	A CD	Type 1469 Type 5R	47BT501D
C_{74}	Capacitor - BFO plate by-pass (V_{11})	Same as C_{51}			
C_{75}	Capacitor - BFO to diode coupling	2 mmfd. - twisted leads			

LIST OF REPLACEMENT PARTS - Continued

SYMBOL	NAME AND FUNCTION	DESCRIPTION	MFGR.	MANUFACTURER'S PART NUMBER	HALLICRAFTER'S PART NUMBER
C_{76}	Capacitor - Impedance equalization (with R_{43}) T_8 primary	Same as C_{25}			
C_{77}	Capacitor - 1st R.F. (V_1) grid return by-pass (transformer secondary isolation	Same as C_{17}			
C_{78}	Capacitor - 1st RF coupling - Band 6 (V_1 to V_2)	10 mmfd. ±10% 500 v. dc. working fixed ceramic	CRL	Class D	47A006
C_{79}	Capacitor - 1st RF coupling - Band 5 (V_1 to V_2)	Same as C_{38}			
C_{80}	Capacitor - 1st RF coupling - Band 4 (V_1 to V_2)	Same as C_{38}			
C_{81}	Capacitor - 1st RF coupling - Band 3 (V_1 to V_2)	2 mmfd. twisted leads			
C_{82}	Capacitor - 2nd RF coupling - Band 6 (V_2 to V_3)	Same as C_{78}			
C_{83}	Capacitor - 2nd RF coupling - Band 5 (V_2 to V_3)	Same as C_{38}			
C_{84}	Capacitor - 2nd RF coupling - Band 4 (V_2 to V_3)	2 mmfd. twisted leads			
C_{85}	Capacitor - 2nd RF coupling - Band 3 (V_2 to V_3)	2 mmfd. twisted leads			
C_{86}	Capacitor - Oscillator plate de-coupling	Same as C_{40}			
C_{87}	Capacitor - R.F. gain control by-pass	.25 mfd. -10% +40% 200 v. dc. working tubular paper	SP		46AT254J
C_{88}	Capacitor - 1st R.F. transformer trimmer (T_{15}) Band 3	4-20 mmfd. variable ceramic	CRL	820-B, with special Hallicrafter's bracket	44-076
C_{89}	Capacitor - 1st R.F. transformer trimmer (T_{16}) Band 4	Same as C_{88}			
C_{90}	Capacitor - 1st R.F. transformer trimmer (T_{17}) Band 5	Same as C_{88}			

LIST OF REPLACEMENT PARTS - Continued

SYMBOL	NAME AND FUNCTION	DESCRIPTION	MFGR.	MANUFACTURER'S PART NUMBER	HALLICRAFTER'S PART NUMBER
C_{91}	Capacitor - 1st R.F. transformer trimmer (T_{18}) Band 6	Same as C_{88}			
C_{92}	Capacitor - 2nd R.F. transformer trimmer (T_{19}) Band 1	3-25 mmfd. variable mica compression	UE		C_{92} and C_{93} Part of 44-052
C_{93}	Capacitor - 2nd R.F. transformer trimmer (T_{20}) Band 2	Same as C_{92}			
C_{94}	Capacitor - 2nd R.F. transformer trimmer (T_{21}) Band 3	2-6 mmfd. variable ceramic	CRL	820-A, with special Hallicrafter's bracket	44-077
C_{95}	Capacitor - 2nd R.F. transformer trimmer (T_{22}) Band 4	Same as C_{88}			
C_{96}	Capacitor - 2nd R.F. transformer trimmer (T_{23}) Band 5	Same as C_{88}			
C_{97}	Capacitor - 2nd R.F. transformer trimmer (T_{24}) Band 6	Same as C_{88}			
C_{98}	Capacitor - Oscillator transformer trimmer (T_{25}) Band 1	Same as C_{92}			
C99	Capacitor - Oscillator transformer trimmer (T_{26}) Band 2	Same as C_{92}			
C_{100}	Capacitor - Oscillator transformer trimmer (T_{27}) Band 3	5-25 mmfd. variable air	SI		48-049
C_{101}	Capacitor - Oscillator transformer trimmer (T_{28}) Band 4	Same as C_{100}			
C_{102}	Capacitor - Oscillator transformer trimmer (T_{29}) Band 5	Same as C_{100}			
C_{103}	Capacitor - Oscillator transformer trimmer (T_{30}) Band 6	1-10 mmfd. variable air	MN	22-5230	48-031

LIST OF REPLACEMENT PARTS - Continued

SYMBOL	NAME AND FUNCTION	DESCRIPTION	MFGR.	MANUFACTURER'S PART NUMBER	HALLICRAFTER'S PART NUMBER
C_{104}	Capacitor - Primary resonating (T_1) 1st I.F. transformer	275 mmfd. silver mica (inside T_1)	SI		C_{104} and C_{105} part of 50B082B
C_{105}	Capacitor - Secondary resonating (T_1) 1st I.F. transformer	Same as C_{104} (inside T_1)			
C_{106}	Capacitor - Primary resonating (T_2) 2nd I.F. transformer	125 mmfd. silver mica (inside T_2)	SI		C_{106} and C_{107} part of 50B081
C_{107}	Capacitor - Secondary resonating (T_2) 2nd I.F. transformer	85 mmfd. silver mica (inside T_2)	SI		
C_{108}	Capacitor - Trimmer - Diode Transformer primary (T_3)	90-125 mmfd. variable ceramic (inside T_3)	SWI		C_{108} and C_{109} part of 50B083
C_{109}	Capacitor - Trimmer - Diode transformer secondary (T_3)	Same as C_{108} (inside T_3)			
C_{110}	Capacitor - Trimmer - ANL transformer primary (T_5)	80 mmfd. (nominal) variable mica compression (inside T_5)	SWI		C_{110} and C_{111} part of 50B097
C_{111}	Capacitor - Trimmer - ANL transformer secondary (T_5)	Same as C_{110} (inside T_5)			
C_{112}	Capacitor - Primary resonating (T_6) AVC transformer	100 mmfd. mica (inside T_6)	SWI		C_{112} part of 50B080
R_1	Resistor - AVC return for V_1	100,000 ohm ±20% - 1/2 watt - Insulated carbon	ER	Type 504	23BX104F
R_2	Resistor -- R.F. gain manual control	10,000 ohm ± 20% potentimeter curve No. 8 reversed	CT		25A066
R_3	Resistor - Bias - 1st R.F. cathode (V_1)	300 ohm ± 10% - 1/2 watt - Insulated carbon	ER	Type 504	23BX301E

LIST OF REPLACEMENT PARTS - Continued

SYMBOL	NAME AND FUNCTION	DESCRIPTION	MFGR.	MANUFACTURER'S PART NUMBER	HALLICRAFTER'S PART NUMBER
R_4	Resistor - 1st R.F. screen isolation (V_1)	25,000 ohm - 1/2 watt - ± 10% Insulated carbon	ER	Type 504	23BW253E
R_5	Resistor - 1st R.F. plate cirucit isolation	1,000 ohm ± 20% - 1/2 watt - Insulated carbon	ER	Type 504	23BX102F
R_6	Resistor - Oscillator (V_4) primary isolation	6,800 ohm ± 10% - 2 watt - Insulated carbon	IRC	Type BT2	23BV682E
R_7	Resistor - AVC return for V_2	Same as R_1			
R_8	Resistor - Bias - 2nd R.F. cathode (V_2)	Same as R_3			
R_9	Resistor - 2nd R.F. screen isolation (V_2)	Same as R_5			
R_{10}	Resistor - 2nd R.F. (V_2) plate circuit isolation	3000 ohm ± 20% - 1/2 watt - Insulated carbon	ER	Type 504	23BX302F
R_{11}	Resistor - AVC return for V_3	Same as R_1			
R_{12}	Resistor - Bias - Mixer cathode (V_3)	400 ohm ± 10% - 1/2 watt - Insulated carbon	ER	Type 504	23BX401E
R_{13}	Resistor - Mixer screen isolation (V_3)	Same as R_5			
R_{14}	Resistor - Mixer (V_3) plate circuit isolation	Same as R_3			
R_{15}	Resistor - AVC return for V_5	Same as R_1			
R_{16}	Resistor - Bias - 1st IF cathode (V_5) Bands 1, 2 and 6	270 ohm ± 10% - 1/2 watt - Insulated carbon	ER	Type 504	23BX271E
R_{17}	Resistor - 1st I.F. screen isolation (V_5)	Same as R_5			
R_{18}	Resistor - 1st I.F. plate circuit isolation	Same as R_{10}			

LIST OF REPLACEMENT PARTS - Continued

SYMBOL	NAME AND FUNCTION	DESCRIPTION	MFGR.	MANUFACTURER'S PART NUMBER	HALLICRAFTER'S PART NUMBER
R_{19}	Resistor - 2nd I.F. (V_6) grid leak	Same as R_1			
R_{20}	Resistor - 2nd I.F. (V_6) grid leak	500,000 ohm ± 20% - 1/2 watt - Insulated carbon	ER	Type 504	23BX504F
R_{21}	Resistor - Bias - 2nd I.F. cathode (V_6)	250 ohm ± 10% - 1/2 watt - Insulated carbon	ER	Type 504	23BX251E
R_{22}	Resistor - 2nd I.F. screen isolation (V_6)	Same as R_5			
R_{23}	Resistor - 2nd I.F. plate circuit isolation	Same as R_{10}			
R_{24}	Resistor - Diode load & AVC voltage divider	Same as R_1			
R_{25}	Resistor - Diode load & AVC voltage divider	Same as R_{20}			
R_{26}	Resistor - Bias - 1st I.F. cathode (V_5) Bands 3 & 5 (in series with R_{16})	1800 ohm ± 10% - 1/2 watt - Insulated carbon	ER	Type 504	23BX182E
R_{27}	Resistor - AVC return for V_5 & V_7	Same as R_{20}			
R_{28}	Resistor - Fixed shunt across carrier level meter	100 ohm ± 20% - 1/2 watt - Insulated carbon	ER	Type 504	23BX101F
R_{29}	Resistor - Variable shunt across carrier level meter. Manual "Zero set"	500 ohm ± 20% - variable potentiometer curve No. 7 reversed	CT		25A022
R_{30}	Resistor - Voltage dropping plate supply to V_7 thru meter	27,000 ohm ± 10% -2 watt - Insulated carbon	IRC	Type BT2	23BV273E
R_{31}	Resistor - Voltage divider	11,000 ohm ± 10% - 1½ watt metal clad	CS MT		R_{31} and R_{32} part of 24A046
R_{32}	Resistor - Voltage divider	4000 ohm ± 10% - 7 watt metal clad	CS MT		

LIST OF REPLACEMENT PARTS - Continued

SYMBOL	NAME AND FUNCTION	DESCRIPTION	MFGR.	MANUFACTURER'S PART NUMBER	HALLICRAFTER'S PART NUMBER
R_{33}	Resistor - Variable AF gain control Manual operation	500,000 ohm ± 20% - variable potentiometer curve No. 6	CT		25A065
R_{34}	Resistor - Bias - 1st audio cathode (V_{12})	Same as R_5			
R_{35}	Resistor - Variable tone control-Manual operation	500,000 ohm ± 20% - variable potentiometer curve No. 1	CT		25A064
R_{36}	Resistor - Audio phase inverter plate load (V_{12})	Same as R_1			
R_{37}	Resistor - 1st audio plate load (V_{12})	Same as R_1			
R_{38}	Resistor - 1st audio plate de-coupling	50,000 ohm ± 20% - 1/2 watt - Insulated carbon	ER	Type 504	23BX503F
R_{39}	Resistor - Grid leak (V_{12} & V_{14}) & grid voltage divider - with R_{41}	200,000 ohm ± 20% - 1/2 watt - Insulated carbon	ER	Type 504	23BX204F
R_{40}	Resistor - Grid leak (V_{13})	250,000 ohm ± 20% - 1/2 watt - Insulated carbon	ER	Type 504	23BX254F
R_{41}	Resistor - Grid leak for V_{14} & grid voltage divider for V_{12} (with R_{39})	Same as R_{40}			
R_{42}	Resistor - Bias - Audio power stage (V_{13} & V_{14}) cathode	220 ohm ± 10% - 2 watt - Wire wound	IRC	Type BW2	24BC221E
R_{43}	Resistor - Impedance equalization - (with C_{76}) T_8 primary	20,000 ohm ± 10% - 2 watt - carbon	CRL	Type 316	23A001
R_{44}	Resistor - Audio power dissipation (Headphone operation)	5000 ohm ± 20% - 10 watt - wire wound - vitreous enamel	U	Type CC	24BG502E
R_{45}	Resistor - BFO plate load (V_{11})	Same as R_{43}			

LIST OF REPLACEMENT PARTS - Continued

SYMBOL	NAME AND FUNCTION	DESCRIPTION	MFGT.	MANUFACTURER'S PART NUMBER	HALLICRAFTER'S PART NUMBER
R_{46}	Resistor - BFO grid leak (V_{11})	Same as R_{38}			
R_{47}	Resistor - Spurious oscillation suppressor (V_4)	8 ohm ± 20% - 1/2 watt Insulated carbon	ER	Type 504	23BX080F
R_{48}	Resistor - Minimum bias - ANL cathode (V_{10})	Same as R_1			
R_{49}	Resistor - ANL diode load (V_{10})	1 megohm ± 20% - 1/2 watt	CRL	Type 710	23A002
R_{50}	Resistor - Noise amplifier plate circuit isolation - T_5 primary.	500 ohm ± 20% - 1/2 watt - Insulated carbon	ER	Type 504	23BX501F
R_{51}	Resistor - Screen isolation - Noise amplifier (V_9)	20,000 ohm ± 20% - 1 watt - carbon	CRL	Type 314	23A003
R_{52}	Resistor - Bias - Noise amplifier (V_9) Bleeder from 100 v. to R_{53}	Same as R_{38}			
R_{53}	Resistor - Variable bias - Noise amplifier. Manual control	50,000 ohm ±20% - potentiometer. Curve No. 6 reversed	CT		25A067
R_{54}	Resistor - Minimum bias - Noise amplifier cathode V_9	35 ohm ± 20% - 1/2 watt carbon	CRL	Type 310	23A004
R_{55}	Resistor - Grid leak - (V_9) - Noise amplifier	Same as R_{20}			
R_{56}	Resistor - Screen isolation - AVC amplifier (V_8)	Same as R_5			
R_{57}	Resistor - AVC return for noise amplifier (V_9)	Same as R_1			
R_{58}	Resistor - Bias - AVC amplifier cathode (V_8)	200 ohm ± 10% - 1/2 watt - Insulated carbon	ER	Type 504	23BX201E
R_{59}	Resistor - Diode load and amplified AVC voltage divider (with R_{60})	Same as R_1			

LIST OF REPLACEMENT PARTS - Continued

SYMBOL	NAME AND FUNCTION	DESCRIPTION	MFGR.	MANUFACTURER'S PART NUMBER	HALLICRAFTER'S PART NUMBER
R_{60}	Resistor - Diode load & amplified AVC voltage divider (with R_{59})	Same as R_{40}			
R_{61}	Resistor - Amplified AVC isolation	Same as R_{20}			
R_{62}	Resistor - Grid Leak - AVC amplifier (V_8)	Same as R_{20} (inside T_1)			
R_{63}	Resistor - Plate circuit isolation AVC amplifier (V_8)	Same as R_{10}			
R_{64}	Resistor - Amplified AVC isolation	Same as R_{20}			
R_{65}	Resistor - Injector grid leak - mixer tube (V_3)	Same as R_{38}			
R_{66}	Resistor - Oscillator grid leak (V_4)	Same as R_{38}			
R_{67}	Resistor - Spurious oscillation suppressor (V_1) Band 1	Same as R_{50}			
R_{68}	Resistor - Bias - 1st I.F. cathod (V_5) Band 4 - in series with R_{16}	1200 ohm ± 10% 1/2 watt - Insulated carbon	ER	Type 504	23BX122E
R_{69}	Resistor - Primary shunt - Noise amplifier transformer (T_5)	Same as R_1			
R_{70}	Resistor - ANL circuit (V_{10}) balance	Same as R_{49}			
R_{71}	Resistor - External heat dissipation for oscillator plate decoupling	5000 ohm ± 10% 1 watt - carbon	CRL	Type 314	23A005
R_{72}	Resistor - Spurious oscillation suppressor (V_1) Band 2	Same as R_{50}			
T_1	Transformer - 1st IF	455 KC - fixed capacity Variable iron core tuning	SI		50B082B
T_2	Transformer - 2nd IF and crystal network	455 KC - fixed capacity Variable iron core tuning	SI		50B081

LIST OF REPLACEMENT PARTS - Continued

SYMBOL	NAME AND FUNCTION	DESCRIPTION	MFGR.	MANUFACTURER'S PART NUMBER	HALLICRAFTER'S PART NUMBER
T_3	Transformer - Diode IF	455 KC - Ceramic trimmer tuning	SWI		50B083
T_4	Transformer - BFO	455 KC - fixed capacity Variable iron core tuning	SWI		54B014
T_5	Transformer - ANL amplifier	455 KC - compression mica trimmer tuning	SWI		50B097
T_6	Transformer - AVC amplifier	455 KC - Variable iron core tuning	SWI		50B080
T_7	Transformer - Power	Secondary winding - 580 v. ac. C.T. at 185 MA Filament winding - 6.3 v. ac. 5.5 A Rectifier winding - 5 v. ac. at 3 A	GT ST		52B033 Pri. 117 v. 50-60 cycles 52B034 Pri. 115-230 v. 25-60 cycles
T_8	Transformer - Audio output	10,000 ohm C.T. primary 100-500-5000 ohm secondary	GT		55A009
T_9	Transformer - Antenna - Band 3	3.0 - 5.8 MC air core	SWI		51A276
T_{10}	Transformer - Antenna - Band 4	5.8 - 11.5 MC air core	SWI		51A277
T_{11}	Transformer - Antenna - Band 5	10.5 - 21 MC air core	SWI		51A278
T_{12}	Transformer - Antenna - Band 6	21 - 43 MC air core	SWI		51A279
T_{13}	Transformer - Antenna - Band 1	550 - 1600 KC air core	SWI		51A274
T_{14}	Transformer - Antenna - Band 2	1.6 - 3.0 MC air core	SWI		51A275
T_{15}	Transformer - R.F. - Band 3	3.0 - 5.8 MC Variable-iron core	SWI		51A280
T_{16}	Transformer - R.F. - Band 4	5.8 - 11.5 MC Variable-iron core	SWI		51A281
T_{17}	Transformer - R.F. - Band 5	10.5 - 21 MC Variable-iron core	SWI		51A282

LIST OF REPLACEMENT PARTS - Continued

SYMBOL	NAME AND FUNCTION	DESCRIPTION	MFGR.	MANUFACTURER'S PART NUMBER	HALLICRAFTER'S PART NUMBER
T_{18}	Transformer - R.F. - Band 6	21 - 42 MC Variable-iron core	SWI		51A283
T_{19}	Transformer - Mixer input - Band 1	550 - 1600 KC air core	SWI		51A284
T_{20}	Transformer - Mixer input - Band 2	1.6 - 3.0 MC air core	SWI		51A285
T_{21}	Transformer - Mixer input - Band 3	3.0 - 5.8 MC Variable-iron core	SWI		51A286
T_{22}	Transformer - Mixer input - Band 4	5.8 - 11.5 MC Variable-iron core	SWI		51A287
T_{23}	Transformer - Mixer input - Band 5	10.5 - 21 MC Variable-iron core	SWI		51A288
T_{24}	Transformer - Mixer input - Band 6	21 - 42 MC Variable-iron core	SWI		51A289
T_{25}	Transformer - Oscillator - Band 1	550 - 1600 KC Variable-iron core	SWI		51A290
T_{26}	Transformer - Oscillator - Band 2	1.6 - 3.0 MC Variable-iron core	SWI		51A291
T_{27}	Transformer - Oscillator - Band 3	3 - 5.8 MC Variable-iron core	SWI		51A292
T_{28}	Transformer - Oscillator - Band 4	5.8 - 11.5 MC Variable-iron core	SWI		51A293
T_{29}	Transformer - Oscillator - Band 5	10.5 - 21 MC Variable-iron core	SWI		51A294
T_{30}	Transformer - Oscillator - Band 6	21 - 42 MC Variable-iron core	SWI		51A295
CH_1	Inductor - Power supply filter	13 henries ± 10% at 100 milliamperes dc. - dc. resistance - 300 ohms ± 10%	GT		56A008

LIST OF REPLACEMENT PARTS - Continued

SYMBOL	NAME AND FUNCTION	DESCRIPTION	MFGR.	MANUFACTURER'S PART NUMBER	HALLICRAFTER'S PART NUMBER
CH_2	Inductor - Bass filter	Inductance - 4 henries ± 10% dc. resistance 220 ohms ± 10%	ST		55A010
CH_3	Inductor - Wave trap	455 KC - ANL IF filter	SWI		CH_3 and C_{55} part of 53A012
J_1	Jack - Phonograph	Std. tip and sleeve	U	503-C	36A003
J_2	Jack - Headphone	Std. tip and sleeve	U		36A004
FS_1	Fuse - Power line	1½ amp. 250 v.	LF	Type 3AG No. 1041	39A304
PL_1	Plug - D.C. power supply	Octal shorting plug in AC operation	AP		81A007
PL_2	Plug - A.C. power cord and plug	2 conductor	E		87A078
SO_1	Socket - For D.C. power supply	Octal marked "PWR"	AP	MIP-8T	6A042
SO_2	Socket - For remote "send-receive" switch or relay	Two circuit	AL	4002T	10A015
TS_1	Terminal - Antenna	Marked - A_2 A_1	MM		8A039
TS_2	Terminal - Speaker	Marked - 5000	MM		8A040
TS_3	Terminal - Speaker	Marked - 500	MM		8A041
M_1	Meter - Carrier level	5 milliampere movement	BE		82A007
CX_1	Crystal - IF filter	455 KC ± 7 KC	BL		19A001

LIST OF REPLACEMENT PARTS - Continued

SYMBOL	NAME AND FUNCTION	DESCRIPTION	MFGR.	MANUFACTURER'S PART NUMBER	HALLICRAFTER'S PART NUMBER
SW_1	Switch - I.F. AVC "ON and OFF"	SW_1, SW_2, SW_6 and SW_7 on same wafer	OM		60A052
SW_2	Switch - BFO "ON and OFF"				
SW_3	Switch - Power "ON and OFF"	SPST on rear of R_{35}	CT		Part of 25A064
SW_4	Switch - Send - Receive	SPST - Bat handle toggle	HH		60A013
SW_5	Switch - ANL amplifier "ON and OFF"	DPST on rear of R_{53}	CT		SW_5 and SW_{5-1} part of 25A067
SW_{5-1}	Switch - ANL diode "ON and OFF"				
SW_6	Switch - Band 1 R.F. AVC "ON and OFF"	SW_1, SW_2, SW_6 and SW_7 on same wafer	OM		60A052
SW_7	Switch - Band 2, 3, 4, 5 and 6 R.F. AVC "ON and OFF"				
SW_{8-1}	Switch - Antenna trimmer band selector	SW_{8-1}, SW_{8-2}, SW_{8-3} and SW_{8-4} on same unit	OM		62B025
SW_{8-2}	Switch - Antenna transformer primary selector				
SW_{8-3}	Switch - Antenna transformer secondary selector				
SW_{8-4}	Switch - Antenna transformer secondary tuning condenser selector				
SW_{8-5}	Switch - 1st RF transformer primary selector	SW_{8-5}, SW_{8-6} and SW_{8-7} on same unit	OM		62B013
SW_{8-6}	Switch - 1st RF transformer secondary selector				
SW_{8-7}	Switch - 1st RF transformer secondary tuning condenser selector				
SW_{8-8}	Switch - 2nd RF transformer primary selector	Same as SW_{8-5}, SW_{8-6} and SW_{8-7}			
SW_{8-9}	Switch - 2nd RF transformer secondary selector				

LIST OF REPLACEMENT PARTS - Continued

SYMBOL	NAME AND FUNCTION	DESCRIPTION	MFGR.	MANUFACTURER'S PART NUMBER	HALLICRAFTER'S PART NUMBER
SW_{8-10}	Switch - 2nd RF transformer secondary tuning condenser selector	Same as SW_{8-5}, SW_{8-6}, and SW_{8-7}			
SW_{8-11}	Switch - Oscillator transformer primary selector				
SW_{8-12},	Switch - Oscillator transformer secondary selector	SW_{8-11}, SW_{8-12}, and SW_{8-13} on same unit	OM		62B015
SW_{8-13}	Switch - Oscillator transformer secondary tuning condenser selector				
SW_{8-14}	Switch - 1st IF bias selector (V_5)	SW_{8-14} and SW_{8-15} on same wafer	OM		62B023
SW_{8-15}	Switch - RF AVC voltage selector				
SW_{9-1}	Switch - 1st IF selectivity selector				
SW_{9-2}	Switch - 2nd IF selectivity selector	SW_{9-1}, SW_{9-2}, and SW_{9-3} on same unit	OM		60B048
SW_{9-3}	Switch - Crystal selectivity selector				
SW_{10}	Switch - Bass "IN and OUT"	SPDT Bat handle toggle	HH		60A012
I_1	Lamp - Band spread dial	6.3 v. - .25 amp.	GE	#44	39A003
I_2	Lamp - Main tuning dial	Same as I_1			
I_3	Lamp - Meter scale	6.3 v. - .15 amp.	GE	#47	39A004
V_1	Tube - 1st R.F. amplifier	RF pentode	RCA	Type 6AB7	90X6AB7
V_2	Tube - 2nd R.F. amplifier	RF pentode	RCA	Type 6SK7	90X6SK7
V_3	Tube - 1st detector mixer	Penagrid converter	RCA	Type 6SA7	90X6SA7
V_4	Tube - Oscillator	Same as V_3			

LIST OF REPLACEMENT PARTS - Continued

SYMBOL	NAME AND FUNCTION	DESCRIPTION	MFGR.	MANUFACTURER'S PART NUMBER	HALLICRAFTER'S PART NUMBER
V_5	Tube - 1st I.F. amplifier	Pentagrid mixer	RCA	Type 6L7	90X6L7
V_6	Tube - 2nd I.F. amplifier	Same as V_2			
V_7	Tube - 2nd detector	Duplex - diode pentode	RCA	Type 6B8	
V_8	Tube - AVC amplifier & AVC rectifier	Same as V_7			
V_9	Tube - Noise amplifier for ANL	Same as V_1			
V_{10}	Tube - Noise peak limiter and noise rectifier	Twin diode	RCA	Type 6H6	90X6H6
V_{11}	Tube - BFO oscillator	Triode	RCA	Type 6J5	90X6J5
V_{12}	Tube - 1st audio & phase inverter	Twin triode	RCA	Type 6SC7	90X6SC7
V_{13}	Tube - Audio power amplifier	Beam power	RCA	Type 6V6GT	90X6V6GT
V_{14}	Tube - Audio power amplifier	Same as V_{13}			
V_{15}	Tube - Power supply rectifier	Full wave rectifier	RCA	Type 5Z3	90X5Z3

H. INDEX TO PARTS MANUFACTURERS

SYMBOL	MANUFACTURER	ADDRESS
A	Aerovox Manufacturing Company	New Bedford, Mass.
AL	Alden Products Company	Brockton, Mass.
AP	American Phenolic Corporation	Chicago, Ill.
BE	Beede Electrical Instrument Co.	Chicago, Ill.
BL	Bliley Electric Co.	Erie, Penna.
CD	Cornell-Dubilier Corporation	South Plainfield, N.J.
CRL	Centralab	Milwaukee, Wis.
CS	Clarostat Manufacturing Co.	Brooklyn, N.Y.
CT	Chicago Telephone Supply Co.	Elkhart, Ind.
E	Essex Wire Corporation	Chicago, Ill.
ER	Erie Resistor Company	Erie, Penna.
GE	General Electric Company	Chicago, Ill.
GT	General Transformer Corporation	Chicago, Ill.
H	The Hallicrafters Company	Chicago, Ill.
HH	Hart & Hegeman Electric Company	Hartford, Conn.
IRC	International Resistance Company	Philadelphia, Penna.
LF	Littlefuse Labs	Chicago, Ill.
MN	Meissner Manufacturing Co.	Mt. Carmel, Ill.
MM	Midwest Molding Company	Chicago, Ill.
MT	The Muter Company	Chicago, Ill.
OM	Oak Manufacturing Company	Chicago, Ill.
RC	Radio Condenser Corporation	Chicago, Ill.
RCA	RCA Manufacturing Company	Chicago, Ill.
SI	F. W. Sickles Company	Springfield, Mass.
SP	Sprague Specialties Company	North Adams, Mass.
ST	Standard Transformer Corporation	Chicago, Ill.
SWI	S. W. Inductor Company	Chicago, Ill.
U	Utah Radio Products	Chicago, Ill.
UE	Underwood Electric Co.	Chicago, Ill.

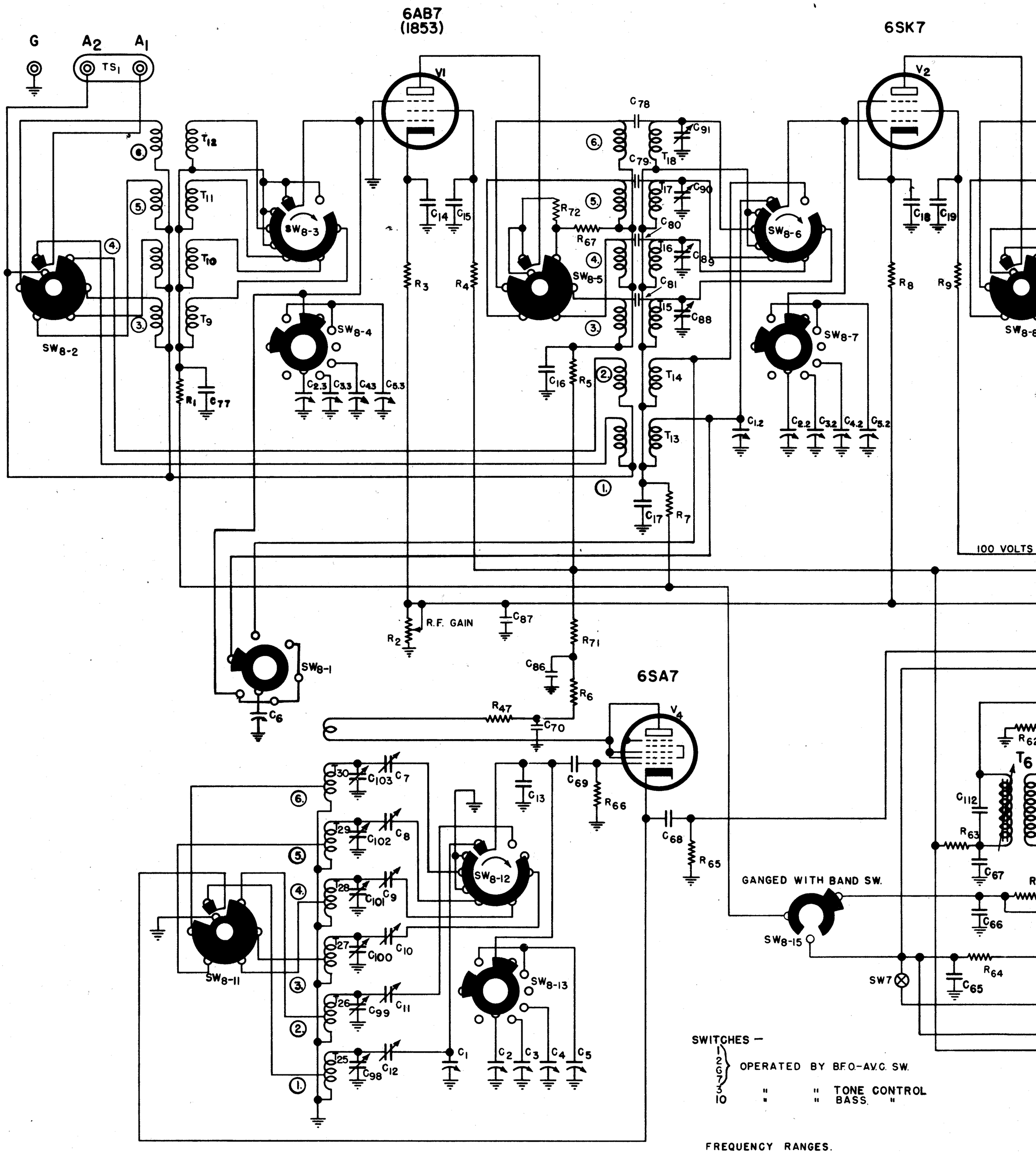
6AB7
(1853)
6SK7
6SA7
G
A2
A1
TS1
V1
V2
V4
T12
T11
T10
T9
SW8-2
SW8-3
SW8-4
SW8-5
SW8-6
SW8-7
SW8-8
SW8-1
SW8-11
SW8-12
SW8-13
SW8-15
SW7
R1
C77
C2.3
C3.3
C4.3
C5.3
R3
R4
C14
C15
C78
C79
C80
C81
C91
C90
C89
C88
T18
T17
T16
T15
R72
R67
C16
R5
T14
T13
C17
R7
C1.2
C2.2
C3.2
C4.2
C5.2
C18
C19
R8
R9
100 VOLTS
R2
R.F. GAIN
C87
R71
C86
R6
R47
C70
C6
C69
C13
R66
C68
R65
T30
T29
T28
T27
T26
T25
C103
C7
C102
C8
C101
C9
C100
C10
C99
C11
C98
C12
C1
C2
C3
C4
C5
GANGED WITH BAND SW.
R62
T6
C112
R63
C67
C66
R64
C65
SWITCHES —
1
2
6
7
3
10
OPERATED BY B.F.O.-A.V.C. SW.
" " TONE CONTROL
" " BASS "
FREQUENCY RANGES.
1. 0.55 MC. TO 1.6 MC.
2. 1.6 MC. TO 3.0 MC.
3. 3.0 MC. TO 5.8 MC.
4. 5.8 MC. TO 11.0 MC.
5. 11.0 MC. TO 21.0 MC.
6. 21.0 MC. TO 43.0 MC.
AVC - BFO SW
LEFT CENTER
SW1 OPEN CLOSED
SW6 OPEN CLOSED
SW7 OPEN CLOSED
SW2 OPEN OPEN

the hallicrafters co.

SCHEMATIC DIAGRAM - SUPER SKYRIDER - MODEL SX-28.

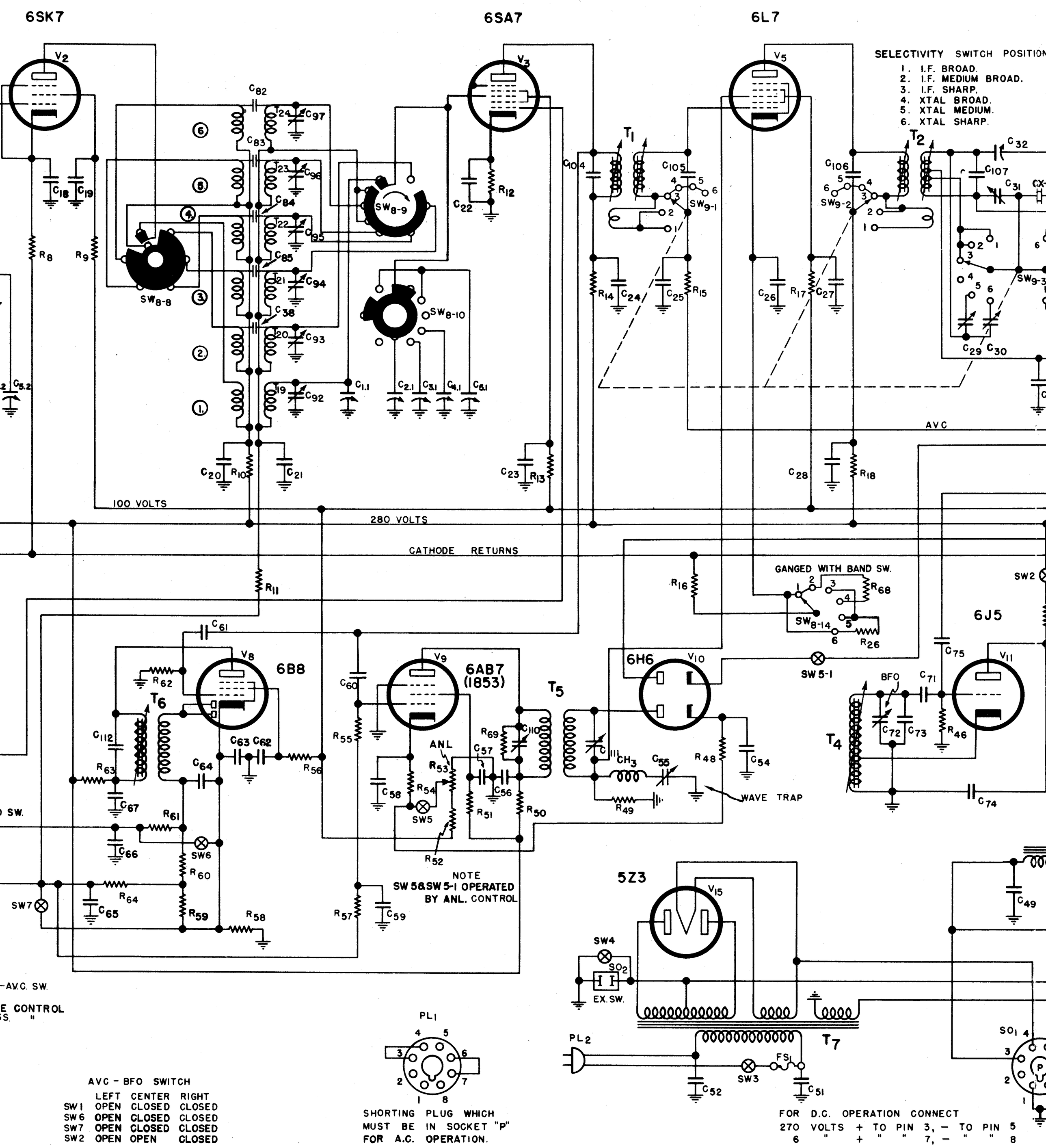

AVC - BFO SWITCH

	LEFT	CENTER	RIGHT
SW1	OPEN	CLOSED	CLOSED
SW6	OPEN	CLOSED	CLOSED
SW7	OPEN	CLOSED	CLOSED
SW2	OPEN	OPEN	CLOSED

SHORTING PLUG WHICH MUST BE IN SOCKET "P" FOR A.C. OPERATION.

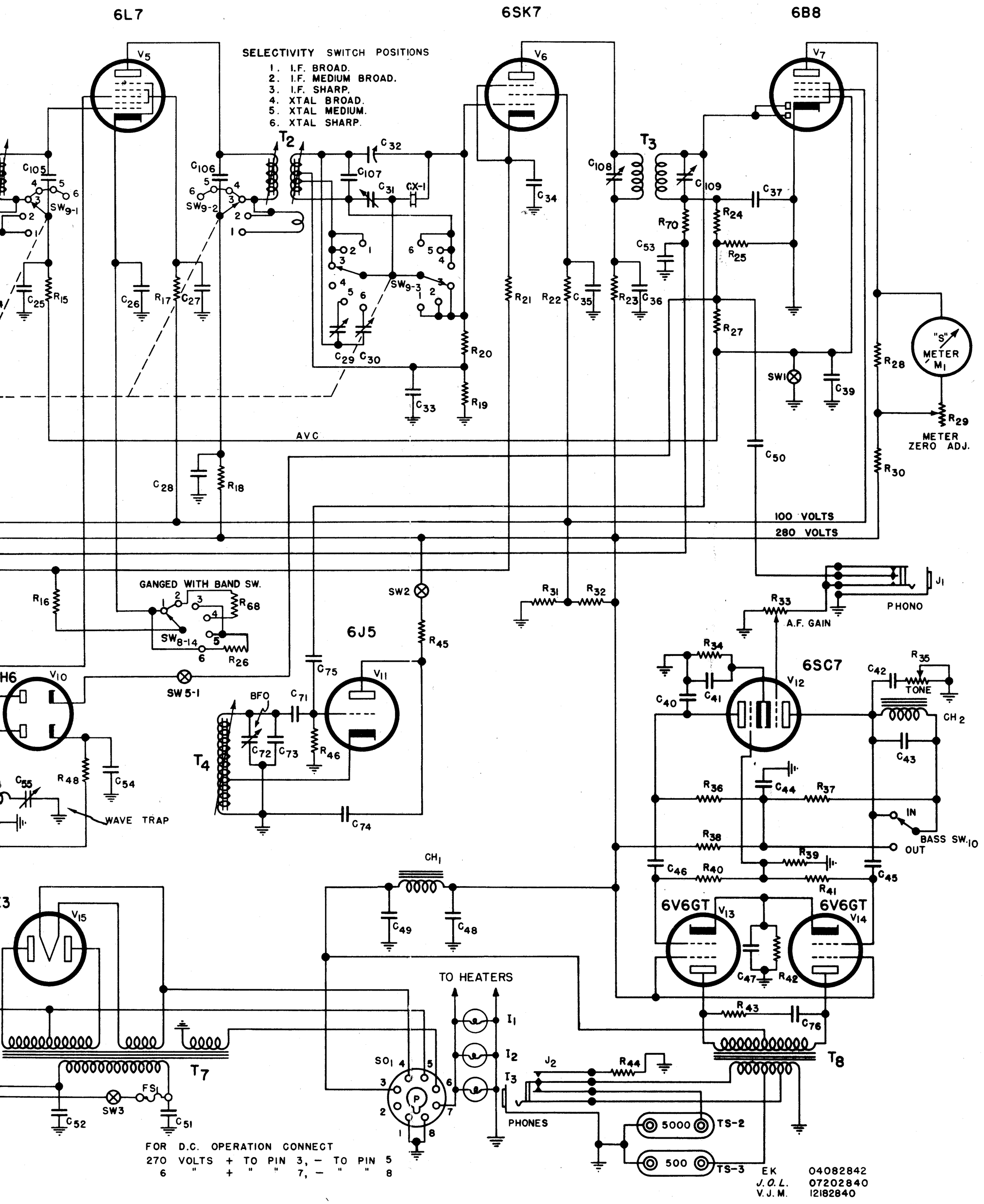

FIG. 13—SX28—SCHEMATIC

SCHEMATIC DIAGRAM - SUPER SKYRIDER - MODEL SX-28.

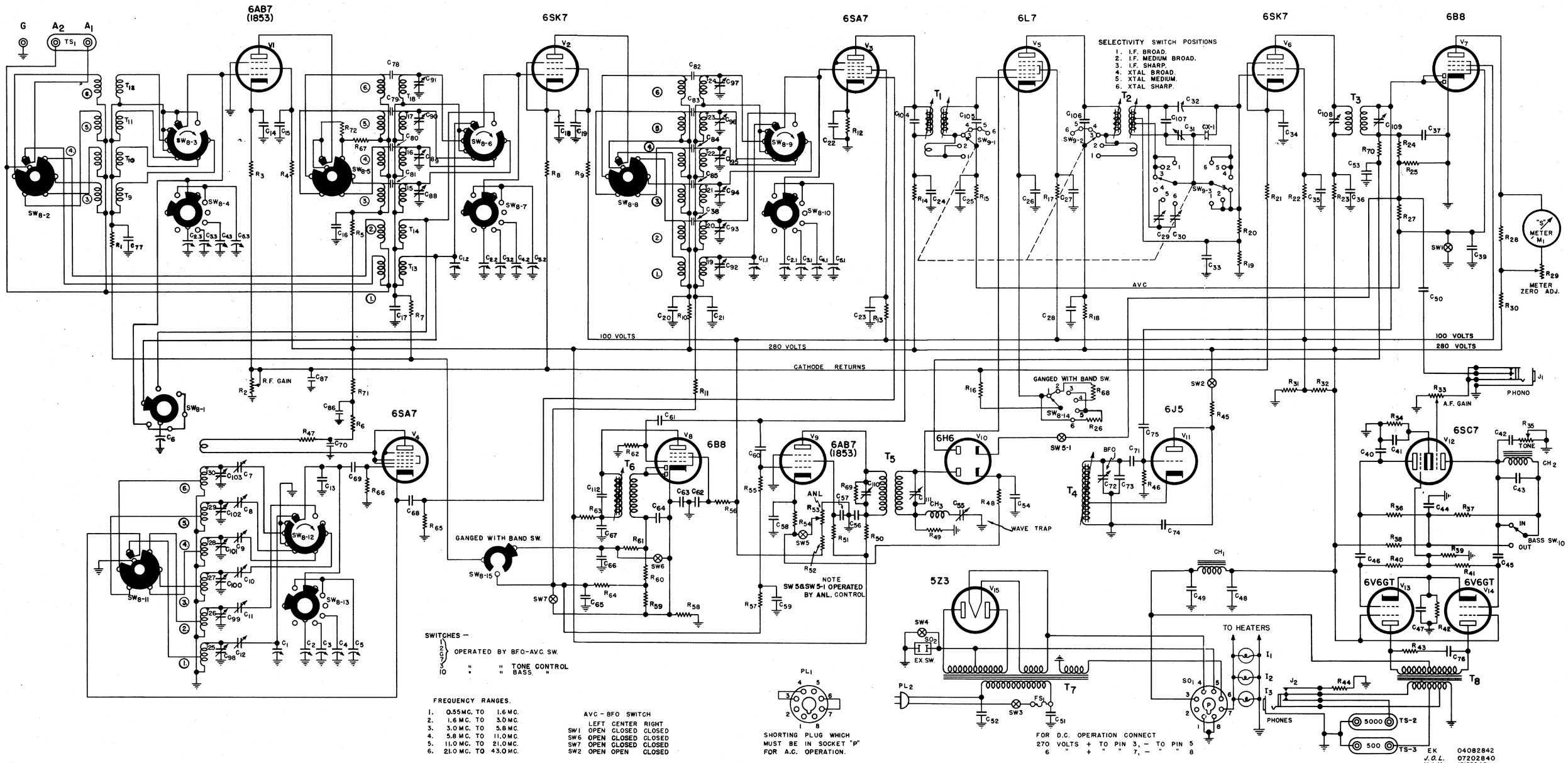

FREQUENCY RANGES.

1.	0.55 MC.	TO	1.6 MC.
2.	1.6 MC.	TO	3.0 MC.
3.	3.0 MC.	TO	5.8 MC.
4.	5.8 MC.	TO	11.0 MC.
5.	11.0 MC.	TO	21.0 MC.
6.	21.0 MC.	TO	43.0 MC.

AVC - BFO SWITCH

	LEFT	CENTER	RIGHT
SW1	OPEN	CLOSED	CLOSED
SW6	OPEN	CLOSED	CLOSED
SW7	OPEN	CLOSED	CLOSED
SW2	OPEN	OPEN	CLOSED

FIG. 13—SX28—SCHEMATIC